Installation and Commissioning Instructions

Modular PBXs for ISDN and Internet Telephony

COMmander 6000
COMmander 6000R
COMmander 6000RX

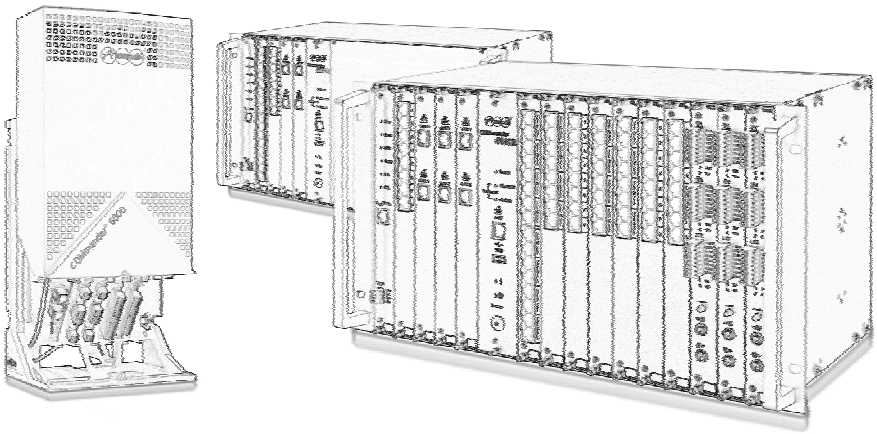

Auerswald®

Table of Contents

Table of Contents

Important Information

This section includes necessary information for operating the devices safely. Before installing and commissioning the PBX, be sure to read the safety information listed here. Also become familiar with the proper use of the device as well as the technical data.

Symbols and signal words used

The symbols and signal words used in this manual mean:

Warning:

Warns of personal injury, for example, caused by hazardous electrical voltage.

Caution :

Warns of damage to property.

Important:

Indicates possible application errors and conditions that, for example, could cause function limitations or malfunctions during operation.

Note:

Indicates supplementary information.

Safety Information

Warning: *Improper handling of the device can result in life-threatening electrical shock and can damage or destroy the PBX.*

→ *Only a qualified electrician may open the casing. If necessary, have an authorised dealer commission the device.*

→ *Only a qualified electrician may perform installation work within an open casing or service work using the buttons inside the casing. If necessary, commission an authorised dealer to perform this work.*

→ *Read the instructions for the device and keep them for future reference.*

Warning: *Touching voltage-carrying conductors or telephone connections may cause a life-threatening electric shock.*

→ *Mount the PBX in the immediate vicinity of an earth wire (potential compensation bar of the house installation). Connect the earth connection of the PBX to the earth wire via a connecting cable with at least 2.5 mm².*

→ *The PBX contains hazardous voltages, even outside of the power supply unit (for instance ringer voltages). Work on active, contact-hazardous parts is only permitted after creating a voltage-free state.*
Working close to active parts is only permitted if these parts are voltage-free or are protected against direct contact.

→ *COMmander 6000: Pull out the power plug of the PBX before commissioning a qualified electrician to open the casing to install the expansion module or perform switching or connecting services.*

→ *COMmander 6000R/RX: The Power button switches the voltage at the module expansion slots and on the main circuit board off. If the system is switched off, a qualified electrician can be commissioned to replace or install expansion modules.*
When installing or replacing a module, only touch the fixing components of the front plate where necessary. Do not insert any electrically conductive objects into the casing, since hazardous voltages continue to apply in the power supply unit of the system.

→ *Remove any voltage from the device by discharging any capacitors present, if necessary. In the case of a malfunction, the electrolytic capacitor for the switch-mode power supply can remain charged for a long time even after being turned off.*

→ *If available, also disconnect the devices from auxiliary power sources (for example, UPS).*

→ *Do not make any structural changes to the device (exception: COMmander 6000R Xtension).*

→ *COMmander 6000R: When commissioning a qualified electrician to upgrade a COMmander 6000R PBX with the COMmander 6000R Xtension extension set, the power plug must be unplugged by all means before starting the assembly. It does not suffice to push the Power button.*
Only mount the components in a voltage-free state.

→ *COMmander 6000R: After having a COMmander 6000R with the COMmander 6000R Xtension extension set upgraded by a qualified electrician, the safety of the device has to be checked according to DIN VDE 0701-0702: 2008 or applicable national regulations.*

→ *For some installation and maintenance work, it is necessary to open the PBX while it is in operation (qualified electrician only). Make sure that the PBX is never left unattended while working with an open casing.*

→ *Be sure to follow the relevant regulations when handling 230 V system voltage and devices attached to the mains.*

→ *Only operate the device when the casing is closed.*

→ *Only operate the device when it is mounted on the wall (COMmander 6000) or securely fastened in a 19" rack (COMmander 6000R/RX).*

Warning: *Liquid penetrating the casing may cause a life-threatening electric shock and can damage or destroy the PBX.*

→ *Only operate PBX in closed, dry rooms.*

→ *Only clean the device with a soft moist cloth or anti-static cloth.*

Warning: *Damaged connection lines as well as damage to the casing and to the PBX can cause life-threatening electrical shocks.*

→ *Only connect the device connection cable with sockets that are designed for that purpose.*

→ *Make sure that the Schuko socket for connecting the PBX is properly connected (according to VDE 0100). The power socket must be located near the PBX and be freely accessible at all times.*

→ *Replace damaged connection lines immediately.*

→ *Use original components and original spare parts only.*

→ *Always have a professional carry out repairs immediately. Please contact your qualified electrician or the manufacturer directly.*

Warning: *Power surges, which can occur during electrical storms, can cause life-threatening electric shocks and can damage or destroy the PBX.*

→ *For this reason, do not mount the PBX during an electrical storm. Avoid disconnecting and connecting lines during an electrical storm.*

→ *Let a qualified electrician lay all the cables inside the building – including the cable to the door terminal system.*

→ *Protect the devices by installing overvoltage protection.*

Caution: *Unauthorised changes to the device can damage the PBX or breach security and EMC regulations. If security-relevant radio services are disturbed, the Federal Network Agency can order decommissioning the device according to §14, section 6, Electromagnetic Compatibility Act.*

→ *Always have a professional carry out repairs. Please contact your qualified electrician or the manufacturer directly.*

→ *The memory card of the PBX contains data which is necessary for the operation of the PBX. Do not remove, mount, or format the memory card. The memory card on the base circuit board should only be exchanged in the case of service jobs according to the directives of Auerswald service staff.*

Caution: *Exceeding (even temporarily) the threshold values indicated in the technical data can damage or even destroy the PBX.*

→ *Note the threshold values indicated in the technical data for voltage, electricity, performance, ambient temperature and humidity.*

→ *COMmander 6000: Never cover the vent slots of the wall casing.*

→ *COMmander 6000R/RX: Make sure not to cover the fan on the rear side of the casing.*

Caution: *Electrostatic charges can destroy sensitive components.*

→ *Divert electrostatic charges from yourself before touching the circuit boards with your hands or any tools. To do this, touch a metal object, preferably earthed, e. g. the earthing terminal of the PBX or a computer housing.*

Important: *Mechanical loads and electro-magnetic fields can impair PBX operation.*

→ *Avoid mechanical loads (for example, vibrations).*

→ *Avoid proximity to devices that generate electro-magnetic fields or react sensitively to them (e. g. radio receivers, private mobile radio devices, amateur radio sets, mobile phones, DECT systems, or similar).*

→ *Do not expose the device to direct sunlight or condensation.*

→ *Protect the device from soiling, excessive dust and condensation.*

→ *Note the values for ambient temperature and humidity indicated in the technical data.*

Important: *A power failure, damaged connection lines/cable sockets or short-circuits in other devices in the building systems can put the PBX out of operation.*

→ *If you have uninterruptible power supply, for example, the UPS-5115 Telecom (Auerswald optional accessory), you can continue operating a large part of the system during a power failure.*

→ *If at all possible, be sure to provide a separate electric circuit for the 230 V connection supplying the PBX.*

Important: *Make sure to take suitable measures for protecting your data and yourself from misuse.*

→ *Prevent unauthorized access to the PBX and its programming.*

→ *Never disclose user names, PINs, or the public IP address of the PBX. This does not only concern postings in forums or communities, but also to service logs of routers and Wireshark traces.*

→ *It is important to consistently use all of the available options for assigning passwords. Do not use passwords which are easy to guess, such as birthdays.*

→ *Make use of the permissions available (programming authorization, exchange line authorizations, restricted numbers, etc.).*

→ *Check the call data recording of your PBX and the LOGs of your NAT router regularly for inconsistencies.*

→ *Additional information about protecting the system from misuse can be found in the internet on the pages of the German Federal Office for Information Security (see* ***www.bsi.bund.de*** *with search term =* ***TK-Anlagen****).*

Proper Use

Important: *Auerswald products are not designed, manufactured, or intended for use or resale in environments requiring fail-safe performance, such as in the operation of life-support systems and/or nuclear facilities. Use or sale of our products for these purposes is only allowed with prior written permission by Auerswald for each individual incident.*
Improper use may cause, for example, functional restrictions or interference, the destruction of the device or, in a worst case scenario, personal injury.

→ *If you are still uncertain about how to use the product properly after reading the section below, please contact your specialised dealer.*

→ *Read the instructions for the device and keep them for future reference.*

The COMmander 6000, COMmander 6000R and COMmander 6000RX devices are telecommunication systems – referred to as PBXs in the following. These PBXs connect various internal devices with various public telecommunication networks, thereby enabling external and internal calls. For this purpose, the PBXs provide a number of different ports/interfaces.

These PBXs are structured modularly. The various modules available allow the systems to be extended step for step depending on how many subscriber connections and ports are required and whether a door terminal system should be operated from each telephone.

The COMmander 6000 is a PBX with a plastic casing available for wall mounting. The COMmander 6000R and COMmander 6000RX are PBXs with 19" casings available for installation in a 19" rack.

The PBXs are suitable for used in the commercial sector (midsize companies). The 1COMmander 6000R/RX are suitable for use in structured IT/telecommunication networks.

PBXs have numerous features, including performing the following tasks:

- Call Distribution
- Ensuring availability
- Charge and call data evaluation
- Cost control
- Central call answering machine (voice mail) and fax memory
- Group and team administration
- Transfers
- Call protection

Important: *Many features are not available until they are set up via the PBX configuration manager.*
In order to use of some of the features, it is necessary to contact the network provider about activating the feature.
In order to use some of the functions, these have to be released in the Upgrade Center.
In order to use some of the functions, it is necessary to extend the hardware.
There may be some incompatibility in combination with terminals and devices of other vendors that adversely influence the usability of functions.

Note: *After a firmware update you usually require a new version of the instructions. Current instructions can be found in the internet (see* ***www.auerswald.de*** *under* ***Service > Products > COMmander 6000 > Documentation****).*

External S_{2M} Port

An external S_{2M} port (not included in the basic assembly) is designed for connecting to an NTBA using the European protocol DSS1 (Euro ISDN). It supports the connection type PBX connection. The S_{2M} port provides a total of up to 30 B-channels. The channels can configured to be directionally dependent (incoming, outgoing or incoming and outgoing).

PMP Port

The PMP port (not included in the basic assembly) is a Protected Monitor Point, based on ITU-T G.772 and ITU-T G.703. It is used for transparent protocol measurement during NTPM operation. It is suitable for connecting measurement devices that support transparent listening in.

External S_0 Port

An external S_0 port (not included in the basic assembly) is designed for connecting an NTBA to the European protocol DSS1 (Euro ISDN). It supports the following connection types:

- Basis access as a PBX connection
- Basis access as a Point-to-Multipoint connection

Note: *On the NTBA with PBX unit connection, only one ISDN device may be operated, in this case, only the PBX. All other ISDN devices are operated as internal subscribers of the PBX.*
On the NTBA with a Point-to-Multipoint connection, other ISDN devices may be operated in addition to the PBX. If the NTBA is equipped with a 230 V power cable and in addition to the PBX, passive devices are connected to the NTBA, the NTBA must be connected with a 230 V power socket.

Furthermore, it is possible to connect to a digital GSM gateway.

Ethernet Port

The devices to be connected to the Ethernet port are dependent on their intended application. The applications listed at the end do not exclude each other.

For Internet telephony (VoIP), the Ethernet port can be connected to the Internet via a router. The PBX can manage 100 VoIP accounts for up to 20 different VoIP

providers: The PBX supports two different types of VoIP account:

- VoIP accounts with one or more VoIP phone numbers (similar the Point-to-Multipoint connection on ISDN)
- VoIP accounts with a DDI number block (similar to the PBX connection on ISDN) based on the SIP-DDI feature (also known as SIP trunking)

For internal IP telephony, VoIP end devices can be connected to the Ethernet port via a switch/router.

The Ethernet port is suitable for connecting the following end devices (system telephones recommended):

- COMfortel 3500 system telephones

Important: *To support the COMfortel 3500, the PBX requires firmware version 5.4 or higher.*

- COMfortel VoIP 2500 AB system telephones (as of firmware version 4.4E)
- COMfortel DECT IP1040 Bases for COMfortel DECT 900C and some GAP capable DECT handsets from other manufacturers (further information can be found in the internet (see **www.auerswald.de**)
- Standard VoIP telephones (SIP)
- Soft phones (SIP)

Important: *Note that many standard VoIP telephones can only use the functions on the PBX to a limited extent.*

For configuration/administration, the Ethernet port can be connected to a separate PC connected or to a local network (LAN).

For a CTI solution (LAN-TAPI), the Ethernet port can be connected to a local network (CTI server and CTI clients). This requires CTI software. We recommend the following software manufacturers:

- ESTOS (www.estos.de), supports Windows XP, Windows Vista and Windows 7
- ilink (direct.ilink.de), supports Mac OS X, version 10.4 and higher

The following telephones connected to the PBX are supported by the LAN-TAPI:

- COMfortel 3500 system telephones

Important: *To support the COMfortel 3500 by the LAN-TAPI, the PBX requires firmware version 5.6 or higher.*

- COMfortel VoIP 2500 AB system telephones
- COMfortel 1600/2600 system telephones

Important: *To support the COMfortel 1600/2600, the PBX requires firmware version 5.4B or higher.*

- COMfortel 1100/1500/2500/2500 AB system telephones
- Analogue telephones
- ISDN telephones
- Standard VoIP telephones (SIP)

Internal S_0 Port

An internal S_0 port has similar requirements, such as an ISDN connection with the Point-to-Multipoint connection type and is suitable for connecting to the following end devices:

- COMfortel 1600/2600 system telephones

Important: *To support the COMfortel 1600/2600, the PBX requires firmware version 5.4B or higher.*

- COMfortel 1100/1500/2500/2500 AB system telephones (as of firmware version 4.4E)
- COMfortel DECT 900 Bases for COMfortel DECT 900C/900
- ISDN telephones in compliance with the Euro ISDN Standard (DSS1)
- ISDN PC controller in compliance with the Euro ISDN Standard (DSS1)

Important: *The power consumption of the end devices on an S_0 port may total a maximum of 4 W. A maximum of 160 W is available for all the a/b-, S0- und UP0 ports together.*

Internal U_{P0} Port

An internal U_{P0} port is a 2-core interface that, for example, becomes useful if existing 2-core lines in an analogue installation should be used. It is suitable for connecting one of the following end devices:

- COMfortel 1600/2600 system telephones

Important: *To support the COMfortel 1600/2600, the PBX requires firmware version 5.4B or higher.*

- COMfortel 1100/1500/2500/2500 AB system telephones (as of firmware version 4.4E)

Any other device can only be connected to the U_{P0} port using a $_U$P0/S_0 adapter. It performs a conversion from 2 to 4-core and therefore provides an S_0 port with two RJ-45 sockets. It is suitable for connecting the following end devices:

- COMfortel DECT 900 Bases for COMfortel DECT 900C/900
- ISDN telephones in compliance with the Euro ISDN Standard (DSS1)
- ISDN PC controller in compliance with the Euro ISDN Standard (DSS1)

Important: *The power consumption of the end devices on a U_{P0} port may total a maximum of 4 W. A maximum of 160 W is available for all the a/b-, S0- und UP0 ports together.*

Internal Analogue Port

An internal analogue port (not included in the basic assembly) is suitable for connecting one of the following end devices:

- Analogue telephones COMfortel 500
- COMfortel DECT 660C
- Analogue telephones with dual-tone multi-frequency

- Analogue telephones with pulse dialling
- Analogue fax machines
- Analogue answering machines
- Modems
- a/b door terminal systems (e. g. TFS-Dialog 300 from Auerswald

Important: *Devices using pulse dialling cannot use the full range of features.*
Devices using multi-frequency (DTMF/tone) dialling must be equipped with a flash button.
A maximum of 160 W is available for all the a/b-, S0- und UP0 ports together.

Note: *When using a T-Net-capable analogue telephone, most T-Net functions can be used via the existing function keys on the telephone.*

Switching Relay

A switching relay (not included in the basic assembly) is suitable for connecting or controlling the following devices:

- Door terminal system according to FTZ 123 D12-0 (for example, TFS Dialog 100 from Auerswald)
- Door opener
- Various devices to be switched (for example, alarm sirens)

Important: *The module supplies no switching voltage to the relay contacts, meaning the devices to be switched must be supplied with external voltage.*

Caution: *The relay contacts can handle a maximum load of 30 V/1 A (therefore, not suitable for a direct connection to 230 V system voltage).*

→ *For switching devices operated on voltage, you therefore need an additional load-switching relay that is compatible with the safety regulations.*

Ringer/Alarm Input

A ringer/alarm input (not a part of the basic assembly) is suitable for connecting or controlling the following devices:

- Door bell button
- Output devices for announcement, alarm and monitoring signals (for example, leak warning devices)

Second Ringer Output

A second ringer output (not included in the basic assembly) is suitable for connecting to an external ringer (not a house door bell) for additional signalling.

Music Input/Audio Output

A music input/audio output (not included in the basic assembly) is suitable for connecting or controlling the following devices:

- Loudspeaker units
- Active loudspeakers
- Music output devices (for example, MP3 or CD players)

USB Host Port 2.0

The USB port is suitable for connecting a single external printer.

Basic Assembly

The basic assembly on the PBXs includes the following connection options:

- 1 Ethernet port for administration as well as internal IP and Internet telephony over two external VoIP channels (SIP-compliant according to RFC 3261, VoIP Codec G.711 µ-Law/a-Law)
- 1 USB host port for connecting a single external printer

Important: *Operating the PBX without modules and Systemfreischaltung is not possible.*

Hardware Extensions

The PBXs have variable module slots for the following modules (COMmander 6000 five module slots; COMmander 6000R five module slots (extendable to 15); COMmander 6000RX 15 module slots):

- COMmander S_{2M} (R) module – this is for extending the PBX by adding an external S_{2M} port as well as a PMP port for protocol measurement.
- COMmander $4S_0$ (R) module – this is for extending the PBX by adding four S_0 ports, separately switchable between S_0 external and S_0 internal.
- COMmander $8S_0$ (R) module – for extending the PBX by adding eight S_0 ports, four of which separately switchable between S_0 external and S_0 internal; four additional ones are permanently set to S_0 internal.
- COMmander $8U_{P0}$ (R) module – for extending the PBX by adding eight internal U_{P0} ports.
- COMmander 8a/b (R) module – for extending the PBX by adding eight internal analogue ports.
- COMmander 2TSM (R) module – for extending the PBX by adding two door terminal ports (FTZ 123 D12-0), six switching relays, for ringer/alarm inputs, a second ringer output, a music input and an audio output.
- COMmander 8VoIP (R) module – use this to extend the PBX with eight VoIP channels as well as with the VoIP Codecs G.723.1, G.726, G.729A/E and iLBC.
- COMmander 16VoIP (R) module – use this to extend the PBX with 16 VoIP channels as well as with the VoIP Codecs G.723.1, G.726, G.729A/E and iLBC.
- COMmander VMF (R) module – use this to extend the PBX with 40 voicemail and 40 fax boxes as well as eight simultaneously available voicemail/fax channels.

Important: *Due to technical reasons, when inserting the first VoIP module, both VoIP channels on the base device must be switched off.*
If a non-compatible COMmander 4S$_0$ module is damaged by its short circuit when being operated in a COMmander 6000, repair charges are required.

→ *Use only COMmander 4S$_0$ modules labeled as version "Rev. 2" or "Rev. 3".*

→ *It may be possible to retrofit other existing modules that do not have this label. For more information about this, please contact our technical Hotline.*

Note: *The first series of the COMmander 4S$_0$ module was designed for the power supply of the COMmander Basic regarding short-circuit resistance. Due to be significantly larger power supply unit for the COMmander 6000, the module needed to be adapted in order to ensure continued short-circuit resistance.*
Switching between the internal and external operating modes of the S$_0$ ports is done using jumpers on the S$_0$ modules.
Using the configuration manager, any number of available VoIP channels can be reserved for internal and external calls.

Software Extensions

In an Upgrade Centre, you can extend the PBX with the following functions/ressources:

Important: *The system dongle required for the extension is part of the basic unit.*

- System activation
- Automatic reception
- Project numbers
- X.31 on an internal S$_0$ port
- Call Through (for all available lines (four in scope of delivery)
- Voice mail/fax boxes (for each another 40 boxes with another eight voice mail/fax channels)
- VoIP (up to 32 additional channels)
- Phonebook Gigaset (Phonebook for Gigaset)

Important: *The addition of boxes and voice mail/fax channels requires a COMmander VMF (R) module.*
The COMmander 8VoIP (R) modules that are present can only be extended with eight VoIP channels (each) when the maximum number of VoIP channels (64) is not reached yet.

COMmander 6000/R

- LCR (for 56 additional subscribers + eight (scope of delivery))
- LAN-TAPI (for 56 additional subscribers + eight (scope of delivery))
- Hotel function (for 48 subscribers)

COMmander 6000R with Xtension/6000RX

- LCR (for up to 112 subscribers (eight in scope of delivery))
- LAN-TAPI (for up to 112 subscribers (eight in scope of delivery))
- Hotel function (for up to 112 subscribers)
- Call data recording (for 12000 additional data sets (6000 in scope of delivery))

Maximum Extension

The PBX can be operated with up to 112 internal subscriber connections (analog, VoIP, and ISDN).

Note: *One internal S$_0$ port corresponds to two internal subscriber connections in this case.*
*An S$_0$ or U$_{P0}$ port set to the option **free** in the port configuration under **Application** is not considered in the calculation of this limit.*

The PBX can be operated with a maximum of 38 external VoIP and ISDN channels:

Maximale Anzahl der einzelnen Ports/Kanäle:

- External S2M port: 1
- External S0 ports: 32
- External S0 ports (for the available S2M port): 4
- Internal S0 ports: 32 (COMmander 6000/R); 56 (COMmander 6000R with Xtension/6000RX)
- Internal UP0 ports: 32 (COMmander 6000/R); 72 (COMmander 6000R with Xtension/6000RX)
- Internal analogue ports: 32 (COMmander 6000/R); 64 (COMmander 6000R with Xtension/6000RX)
- External VoIP channels: 38
- Internal VoIP channels: 64
- Internal voice mail/fax channels: 16

Note: *An S$_0$ port corresponds to two ISDN channels; an S$_{2M}$ port corresponds to 30 ISDN channels.*

Maximum number of modules:

COMmander 6000

- COMmander 8VoIP module: 4
- COMmander 16VoIP module: 4
- COMmander S2M module: 1
- COMmander 4S0 module (Rev. 2 und 3): 5
- COMmander 8S0 module: 4
- COMmander 8UP0 module: 4
- COMmander 8a/b module: 4
- COMmander VMF module: 1
- COMmander 2TSM module: 4

COMmander 6000R

- COMmander 8VoIP R module: 4
- COMmander 16VoIP R module: 4
- COMmander S2M R module: 1
- COMmander 4S0 R module: 5
- COMmander 8S0 R module: 4
- COMmander 8UP0 R module: 4
- COMmander 8a/b R module: 4
- COMmander VMF R module: 1
- COMmander 2TSM R module: 4

COMmander 6000RX

- COMmander 8VoIP R module: 4
- COMmander 16VoIP R module: 4

- COMmander S2M R module: 1
- COMmander 4S0 R module: 12
- COMmander 8S0 R module: 9
- COMmander 8UP0 R module: 9
- COMmander 8a/b R module: 8
- COMmander VMF R module: 1
- COMmander 2TSM R module: 4

Note: *For a table showing extension limits and point system, refer to* *Page 15.*

Installation

The PBXs are intended to be operated in closed rooms. In addition, all of the devices connected to the system must be located in the building.

The PBXs enable you to connect some devices directly, inasmuch as they are close enough to the PBX. The distance depends on the length of the equipment connection cables up to a maximum of 10 m.

If no suitable connection sockets are available or are too far away, you must lay the installation cable permanently.

Warning: *Power surges, which can occur during electrical storms, can cause life-threatening electric shocks.*

→ *Let a qualified electrician lay all the cables inside the building – including the cable to the door terminal system.*

Note: *The terminal clamps on the modules are removable to facilitate installation.*
For the COMmander 6000R/RX, no connections are made directly to the module itself but rather on the front panel.

Accessories and service parts can be bought at specialised stores or in the Internet shop distriCOM at http://www.districom.de. (Delivery is provided only in Germany and Austria.)

Configuration/Administration

The configuration manager on the PBX is contained in the integrated web server and can be opened with a browser. This prevents the need to install special programmes on the computer. You need only an IP-supported operating system and a compatible browser.

The configuration manager enables you to do the following tasks:

- Configure the PBX
- Manage call data
- Manage the recorded voice and fax messages
- Manage telephone book entries
- Manage wake-up times
- Manage call allowance accounts
- Manage internal hold music/announcements
- Manage data for Least Cost Routing
- Service and maintenance

In order to limit the tasks the operator or user must perform, the configuration manager is divided according to three authorisation levels:

- Administrator (admin)
- Sub-administrator (sub-admin)
- User

Note: *Telephony has always the highest priority in a PBX system, even under heavy load conditions. Under heavy traffic it might happen that some of the web pages of the configuration manager are not responding as fast as usual.*

Technical Data

Power Supply

Rated voltage	230 V∼ ± 10%, 50 Hz
Rated current	COMmander 6000/R: max. 0,8 A COMmander 6000RX: max. 1,6 A
Protection class	I
Power	COMmander 6000/R: max. 75 W COMmander 6000RX: max. 230 W
Module	Power supply from the PBX

Environmental Requirements

Operation	+0° ... +40° Celsius, avoid direct sunlight!
Operating the modules	installed in the PBX casing
Storage and shipping	-20° ... +70° Celsius
Humidity	10%- 90%, non-condensing

Connection Options on the Basic Unit

VoIP internal/external, PC and LAN	1 Ethernet port
Printer	1 USB host

Connection Options on the 8VoIP/16VoIP (R) Module

VoIP internal/external, PC and LAN as well as a connection to the basic unit	2 Ethernet ports

Connection Options on the COMmander VMF (R) Module

PC and LAN as well as a connection to the basic unit	2 Ethernet ports
Memory card	1 SD card slot

Connection Options on the COMmander S_{2M} (R) Module

ISDN external	1 external S_{2M} port
Measuring device	1 PMP port

Connection Options on the COMmander $4S_0$ (R) Module

ISDN internal/external	4 S_0 ports, optionally switchable as an internal or external S_0 port (jumper)

Connection Options on the COMmander $8S_0$ (R) Module

ISDN internal/external	8 S_0 ports, 4 of which are optionally switchable as an internal or external S_0 port (jumper); another 4 are permanently set as internal S_0 ports

Connection Options on the COMmander $8U_{P0}$ (R) Module

ISDN internal	8 U_{P0}-ports

Connection Options on the COMmander 8a/b (R) Module

Analogue internal	8 internal analogue ports

Connection Options on the COMmander 2TSM (R) Module

Door stations	1 power supply outlet 2 door terminal input/output jacks (1 per door station) 4 relay outputs (2 for each door station) 4 ringer inputs; of which one is no longer available for each alarm/announcement contact connected
External devices to switch	6 relay outputs; of which two are no longer available for each door station connected
Alarm/announcement contacts	4 alarm inputs
Second ringer	1 second ringer output
Loud speaker/ Playback device	1 audio output 1 music input

Internal Analogue Port

Connection unit	COMmander 6000: Removable spring clamp connection (2-core) COMmander 6000R/RX: RJ-45 socket
Type of dialling	Pulse or tone dialling
Open-circuit voltage	max. 40 VDC
Loop current	approx. 23 mA
Range	2 x 50 Ω, approx. 800 m at 0.6 mm Ø
Ring tone	approx. 45 V_{eff}, configurable: 25/50 Hz
Audible signals	425 Hz ± 5%, interval ± 10%
Charge pulse	configurable: 12/16 kHz
Impedances a/b	symmetrical

Internal S_0 Port

Connection unit	COMmander 6000: removable spring clamp connection (4-core), on 2 ports per module, optional RJ-45 socket COMmander 6000R/RX: RJ-45 socket
Connection type	S_0 basis access as Point-to-Multipoint connection, EURO-ISDN (DSS1), short passive bus
Supply voltage	40 V + 5% / – 15%
Feeder	max. 4 W
End devices	max. 2 end devices recommended (max. 8 ISDN end devices, of which max. 2 end devices without separate power feed, for example, different ISDN telephones)
Range	max. 150 m with typical telephone or network cable (twisted-pair) for bus setup; European standards ENV 41001 [DINV 41001] and EN 28877 apply to IAE-termination technology)
Terminators	100 Ω, switchable; factory settings on

Internal U_{P0} Port

Connection unit	COMmander 6000: removable spring clamp connection (2-core) COMmander 6000R/RX: RJ-45 socket
Connection types	U_{P0} with Euro-ISDN protocol (DSS1); 2 B-channels per port, direct connection to a U_{P0} telephone or to the U_{P0}/S_0 adapter
Range	screened cable: up to 600 m; unscreened cable: up to 1000 m
Supply voltage	40 V + 5% / – 15%
Feeder	max. 4 W

External S_0 Port

Connection unit	COMmander 6000: removable spring clamp connection (4-core), on 2 ports per module, optional RJ-45 socket COMmander 6000R/RX: RJ-45 socket
Connection type	S_0 basis access as Point-to-Multipoint connection or as a -PBX unit connection, EURO-ISDN (DSS1), unit is powered locally
Range	max. 150 m with typical telephone or network cable (twisted-pair
Terminators	switchable; factory settings on

External S 2M Port

Connection unit	removable spring clamp connection (10-core), COMmander 6000: optional RJ-45 socket COMmander 6000R/RX: RJ-45
Connection type	S_{2M} connection, PBX connection, Euro-ISDN (DSS1)

Range	max. 100 m
Terminating resistor	120 }

PMP Port

Connection unit	removable spring clamp connection (4-core)
Load resistance	432 Ω
Load damping	20 dB

Ethernet Port for Internal IP and Internet Telephony (VoIP) as well as for a PC Connection

Connection unit	RJ-45 socket
Interface	10/100 Base-T (10/100 Mbit/s, RJ-45 twisted-pair),
VoIP standard	SIP according to RFC 3261
VoIP codecs on the exchange line	G.711 with VoIP module: G.711, G.723.1, G.726, G.729 A/E, iLBC
VoIP codecs, internal	G.711 with VoIP module: G.711, iLBC
End devices	More than 1 end device per internal VoIP channel (overcommitment)

USB Host for a Printer Connection

Connection unit	USB A socket
Interface	USB (high speed, V2.0)

SD card slot

Interface	SD or SDHC memory card Linux partitions
delivered card	2 GB

Power Supply Outlet

Connection unit	removable spring clamp connection (2-core)
Output voltage	12 VDC, 100 mA per door station

Door Terminal Input/Output

Connection unit	removable spring clamp connection (2-core)
Interface	FTZ 123 D12-0

Relay Outputs

Connection unit	removable spring clamp connection (4 x 2-core and 2 x 3-core)
Type of contact	potential-free, 4 operating current contacts (NC), 2 operating and quiescent current contact (NC and NO)
Contact load capacity	max. 30 V/1 A

Ringer/Alarm Inputs

Connection unit	removable spring clamp connection (4 x 2-core)
Input voltage	configurable: 0 V or 5-15 VAC/DC via the door bell button (NC)
Active state	Contact is closed for more than 0.5 s.

Second Ringer Output

Connection unit	Removable spring clamp connection (2-core)
Ring tone	approx. 45 V_{eff}, configurable: 25/50 Hz
min. load impedance	> 4 kΩ, type 12 kΩ (no house door bell)

Audio Output

Connection unit	Cinch connector
Output level	max. 1 V_{eff}
Output resistance	600 }

Music Input

Connection unit	Cinch connector
Input level	adjustable from -18 to +10 dB (1 V_{eff})
Input resistance	Depending on level setting, 25 to 50 kΩ

Further Information

Cabinet	COMmander 6000: plastic, three piece, consisting of mounting frame, mounting rack and cover COMmander 6000R/RX: closed 19“ plug-in module, 6 HE, IP 20 rating
Dimensions (W x H x D)	Basic unit COMmander 6000: 220 mm x 357 mm x 142 mm Basic unit COMmander 6000R/RX: 483 mm x 265 mm x 245/285 mm with handle (installed depth approx. 300 mm as of the front panel incl. cable entry in the rear) COMmander 8VoIP module: 293 x 97 x 20 mm COMmander 16VoIP module: 293 x 97 x 20 mm COMmander S_{2M} module: 293 x 70 x 16 mm COMmander $4S_0$ module: 293 x 98 x 18 mm COMmander $8S_0$ module: 293 x 98 x 18 mm COMmander $8U_{P0}$ module: 293 x 98 x 18 mm COMmander 8a/b module: 293 x 98 x 15 mm COMmander 2TSM module: 293 x 80 x 15 mm COMmander VMF module: 293 x 97 x 20 mm COMmander 8VoIP R module: 263 x 146 x 25 mm COMmander 16VoIP R module: 263 x 146 x 25 mm COMmander S_{2M} R module: 263 x 146 x 25 mm COMmander $4S_0$ R module: 263 x 146 x 25 mm COMmander $8S_0$ R module: 263 x 146 x 25 mm COMmander $8U_{P0}$ R module: 263 x 146 x 25 mm COMmander 8a/b R module: 263 x 146 x 25 mm COMmander 2TSM R module: 263 x 146 x 25 mm COMmander VMF R module: 263 x 146 x 25 mm

Weight	Basic unit COMmander 6000: approx. 2.4 kg Basic unit COMmander 6000R: approx. 4.6 kg Basic unit COMmander 6000RX: approx. 5.4 kg COMmander 8VoIP module: Approx. 180 g COMmander 16VoIP module: Approx. 180 g COMmander S_{2M} module: Approx. 105 g COMmander $4S_0$ module: Approx. 180 g COMmander $8S_0$ module: Approx. 180 g COMmander $8U_{P0}$ module: Approx. 123 g COMmander 8a/b module: Approx. 140 g COMmander 2TSM module: Approx. 120 g COMmander VMF module: Approx. 122 g COMmander 8VoIP R module: approx. 173 g COMmander 16VoIP R module: approx. 173 g COMmander S_{2M} R module: approx. 162 g COMmander $4S_0$ R module: approx. 283 g COMmander $8S_0$ R module: approx. 252 g COMmander $8U_{P0}$ module: approx. 207 g COMmander 8a/b R module: approx. 189 g COMmander 2TSM R module: approx. 206 g COMmander VMF R module: approx. 178 g
Security	CE, EN 60950

Extension Limits (Point System)

The maximum number of individual modules can be calculated with the help of the following table. Each module has a point value and can be added to the COMmander 6000/R/RX in a defined number. The total sum of point values may not exceed the maximum value of 188.

Point Values of the Modules			
Type of Module	Points	Max. number COMmander 6000/R (5 slots)	Max. number COMmander RX or COMmander 6000R with COMmander R Xtension (15 slots)
COMmander S_{2M}(-R) module	32	1	1
COMmander $4S_0$(-R) module	8	5	12
COMmander $8S_0$(-R) module	16	4	9
COMmander $8U_{P0}$(-R) module	16	4	9
COMmander 8a/b(-R) module	8	4	8
COMmander 2TSM(-R) module	4	4	4
COMmander 8VoIP(-R) module	16	4	4
COMmander 16VoIP(-R) module	16	4	4
COMmander VMF(-R) module	16	1	1

Expansion Examples						
Description	Module (point value)[a]	S_0 ports	U_{P0} ports	a/b ports	VoIP channels	Other in/outputs
Not fully expanded, analog/digital balanced	3 x 8S_0-R module (48) 3 x 8a/b-R module (24) 3 x 8U_{P0}-R module (48) (= 120)	1-12 external 12-23 internal	24	24	2 (internal and external)	–
Not fully expanded analog/digital balanced + S_{2M} exchange line connection	1 x S_{2M}-R module (32) 3 x 8S_0-R module (48) 2 x 8a/b-R module (16) 3 x 8U_{P0}-R module (48) (= 144)	(S_{2M} external) 0-4 external 20-24 internal	24	16	2 (internal and external)	–
Complete expansion, focus on analog	6 x 8S_0-R module (96) 8 x 8a/b-R module (64) 1 x 8U_{P0}-R module (16) (= 176)	1-16 external 32-47 internal	8	64	2 (internal and external)	–
Complete expansion, focus on analog + S_{2M} exchange line connection	1 x S_{2M}-R module (32) 5 x 8S_0-R module (80) 8 x 8a/b-R module (64) 1 x 2TSM-R analog module (4) (= 180)	(S_{2M} external) 0-4 external 36-40 internal	–	64	2 (internal and external)	2 door terminal ports, 4 ringer inputs, 6 switching relays, 1 audio input, 1 audio output
Complete expansion, focus on S_0	9 x 8S_0-R module (144) 5 x 8a/b-R module (40) 1 x 2TSM-R analog module (4) (= 188)	1-16 external max. 56 internal	–	40	2 (internal and external)	2 door terminal ports, 4 ringer inputs, 6 switching relays, 1 audio input, 1 audio output
Complete expansion, focus on S_0 + S_{2M} exchange line connection	1 x S_{2M}-R module (32) 7 x 8S_0-R module (112) 1 x 4S_0-R module (8) 4 x 8a/b-R module (32) 1 x 2TSM-R analog module (4) (= 188)	(S_{2M} external) 0-4 external max. 56 internal	–	32	2 (internal and external)	2 door terminal ports, 4 ringer inputs, 6 switching relays, 1 audio input, 1 audio output
Complete expansion, focus on U_{P0}	1 x 8S_0-R module (16) 3 x 8a/b-R module (24) 9 x 8U_{P0}-R module (144) 1 x 2TSM-R analog module (4) (= 188)	1-8 external 0-7 internal	72	24	2 (internal and external)	2 door terminal ports, 4 ringer inputs, 6 switching relays, 1 audio input, 1 audio output
Complete expansion focus on U_{P0} + S_{2M} exchange line connection	1 x S_{2M}-R module (32) 1 x 8a/b-R module (8) 9 x 8U_{P0}-R module (144) 1 x 2TSM-Ranalog module (4) (= 188)	(S_{2M} external) 0 internal	72	8	2 (internal and external)	2 door terminal ports, 4 ringer inputs, 6 switching relays, 1 audio input, 1 audio output
Complete expansion focus on VoIP and U_{P0} + S_{2M} exchange line connection	1 x S_{2M}-R module (32) 1 x 8a/b-R module (8) 5 x 8U_{P0}-R module (80) 4 x 16VoIP-R module (64) 1 x 2TSM-R analog module (4) (= 188)	(S_{2M} external) 0 internal	40	8	64 (internal and external)	2 door terminal ports, 4 ringer inputs, 6 switching relays, 1 audio input, 1 audio output

a.All examples listed above exclusively refer to the systems COMmander 6000RX or COMmander 6000R with COMmander 6000R Xtension.

Recommended Number of System Telephones for a Complete System

Telephone	Number on COMmander 6000/R	Number on COMmander 6000R with Xtension/6000RX
COMfortel 3500	112	112
COMfortel VoIP 2500 AB	112	112
COMfortel 1600/2600	30	80
COMfortel 2600 with power unit	64	112
COMfortel 1100/1500/2500/2500 AB	30	80
COMfortel 2500/2500 AB with power unit	64	112
COMfortel DECT IP1040 Base with COMfortel DECT 900C Handset	10 40	10 40
COMfortel DECT 900 Base with COMfortel DECT 900/900C Handset	6 18	16 48
COMfortel 500	32	64
COMfortel DECT 660C	32	64

Power Consumption on the Various End Devices

Power	End device	
max. 2 W	COMfortel 1600/2600 and COMfortel 1100/1500/2500/2500 AB system Telephones	
max. 1 W	COMfortel DECT 900 Base system telephones, ISDN telephones	
0 W	Devices with separate power supply	COMfortel 2600, COMfortel 3500, COMfortel 2500/2500 AB and COMfortel VoIP 2500 AB with optional power plug
	Devices that draw power from another device, for example, a PC or router	ISDN PC controllers, COMfortel 3500 and COMfortel VoIP 2500 AB system telephone

Minimum Requirements for the PC for Using the Configuration Manager

A PC with the following features:

- Intel Pentium 1 GHz or compatible processor
- Windows XP (as of Service Pack 3), Windows Vista 32-/64-Bit (as of Service Pack 2), Windows 7 32-/64-Bit, Mac OS X (as of 10.4), Linux (as of Kernel 2.6)
- Memory RAM: 256 MB, recommended 512 MB; for Windows Vista/7: 1024 MB, for 64-bit 2048 MB
- Browser for the configuration: Recommended browsers: Microsoft Internet Explorer as of version 8.0, Mozilla Firefox as of version 4.0, Safari as of version 5.0
- Network card (the computer must be equipped with a network card and the required driver installed)
- **T**ransmission **C**ontrol **P**rotocol /**I**nternet **P**rotocol
- Mouse or compatible pointing device
- SVGA graphics card with a resolution of 1024 x 768, recommended 1280 x 1024, and 65536 colours (16 bit)

Environmental Notice

For the sake of environmental protection, please make sure that packaging materials are also properly disposed of.

Please consult your municipal administration authorities for options of proper and environmentally safe disposal of the device.

If you want us to take over the disposal, please send the device to us.

Shipment which is not prepaid cannot be accepted.

Information about the Accompanying Instructions

Additional Instructions

The Operation and Configuration Instructions are located on the Auerswald Mega Disk included in the package under Manuals. How to configure the PBX using a telephone is described in the Short Operation Instructions on the Auerswald Mega Disk. Also note the information about the warranty, service, CE symbol and declaration of conformity in the leaflet “Conditions of Guarantee, Information Service".

The Latest Information

After a firmware update you usually require a new version of the instructions. Current instructions can be found in the internet (see **www.auerswald.de** under **Service > Products > COMmander 6000 > Documentation**).

Copyright

Abbreviations Used

CPU	**C**entral **P**rocessing **U**nit
CTI	**C**omputer **T**elephony **I**ntegration
DDI	**D**irect **D**ialling **I**n
DTMF	**D**ual **T**one **M**ulti **F**requency
GSM	**G**lobal **S**ystem for **M**obile Communications
LAN	**L**ocal **A**rea **N**etwork
LED	**L**ight **E**mitting **D**iode
MSN	**M**ultiple **S**ubscriber **N**umber
NTBA	**N**etwork **T**ermination for ISDN **B**asic **A**ccess
NTPM	**N**etwork **T**ermination for **P**rimary rate **M**ultiplex access
PoE	**P**ower **o**ver **E**thernet
SD-/SDHC memory card	**S**icure **D**igital Memory Card or **S**icure **D**igital **H**igh **C**apacity Memory Card
TAPI	**T**elephone **A**pplication **P**rogramming **I**nterface
USB	**U**niversal **S**erial **B**us
VoIP	**V**oice **o**ver **I**nternet **P**rotocol

Preparation (Modules)

This section provides overviews of the connections and setting options for the PBX modules. In addition, this section provides information about the necessary hardware settings required on the modules before insertion.

Planning the system configuration in advance should prevent needing to make changes later.

Note: *For the COMmander 6000R/RX, no connections are made directly to the module itself but rather on the front panel. The socket assignments on the front panel are described as of* *Page 34**.*

Planning the System Configuration

Steps to Take

1. Put some thought into what kind of end devices and how many of them you would like to connect to the system. Do the devices correspond to the proper use of the PBX?
2. Think about how many external call channels you need for smooth telephone operation.
3. Determine the number of internal and external ports you need. Which models are required? Does the number of ports and modules correspond to the proper use of the PBX?
4. Locate a suitable location to mount the PBX. This should preferably be placed in the immediate vicinity of the wall sockets of the network provider.

S_{2M} Module Overview (COMmander S_{2M} Module, COMmander S_{2M} R Module)

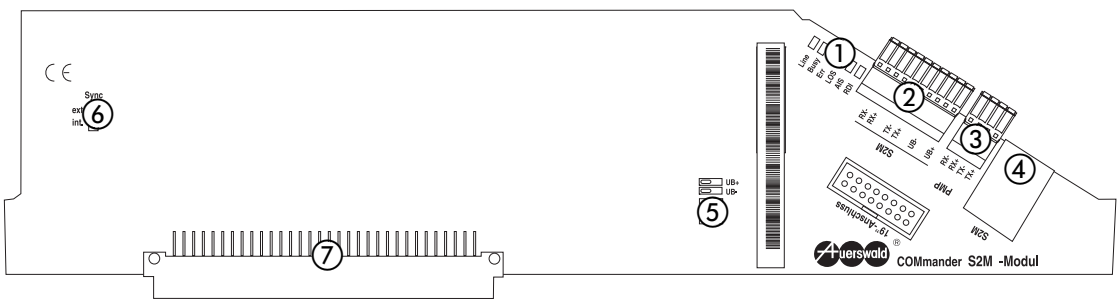

Fig. 1: S_{2M} module

① Status display LEDs

② Terminal clamps (removable) for connecting to the NTPM using terminal clamp panels

③ Terminal clamps (removable) for connecting a measurement device to the PMP (Protected Monitor Point)

④ RJ-45 socket for connecting to the NTPM

⑤ DIP switch for turning the NTPM operating voltage on and off

⑥ Jumper for switching between the external and internal S_{2M} ports (internal S_{2M} port currently not available)

⑦ A connector for attachment on the base circuit board

⑧ S_{2M} R Module: Status display LEDs

⑨ S_{2M} R Module: RJ-45 socket for connecting to the NTPM

⑩ S_{2M} R Module: Terminal clamps (removable) for connecting a measurement device to the PMP (Protected Monitor Point)

Setting the Operating Voltage for the NTPM

Caution: *Electrostatic charges can destroy sensitive components.*

→ *Only a qualified electrician may open the casing and perform installation work within an open casing.*

→ *Divert electrostatic charges from yourself before touching the circuit boards with your hands or any tools. To do this, touch a metal object, preferably earthed, e. g. the earthing terminal of the PBX or a computer housing.*

Requirements

– Previous system planning

– Turning on the operating voltage: The NTPM is not powered by its own power supply plug .

– Turning off the operating voltage: The NTPM is powered by its own power supply plug .

Steps to Take

1. Switch on: Push both buttons on the DIP switch to be switched to the “on” position. See Fig. 2.

Switching off: Push both buttons on the DIP switch to be switched to the “off” position. See Fig. 2.

Fig. 2: Switch setting on the COMmander S_{2M} module

S_0 Module Overview (COMmander 4S_0 Module (Rev. 3), COMmander 4S_0 R Module, COMmander 8S_0 (R) Module)

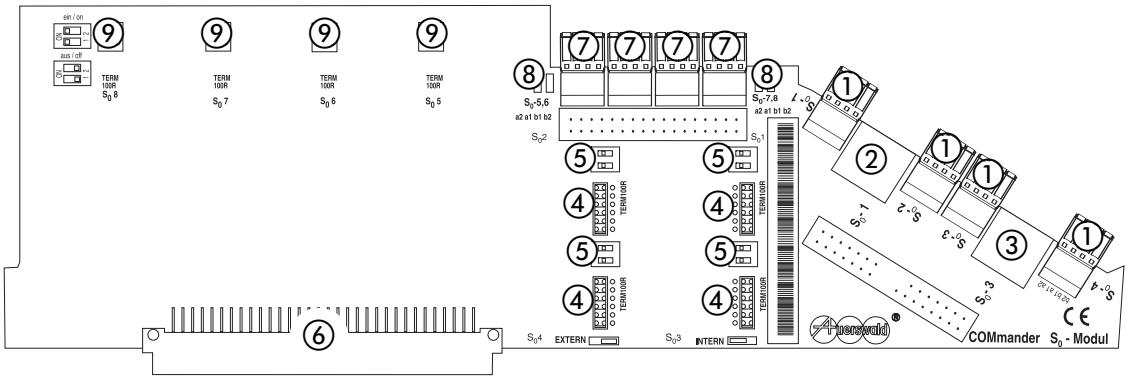

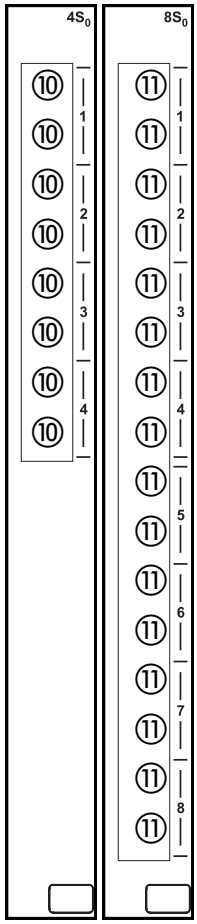

Fig. 3: S_0 module

① S_0 module: Terminal clamps (removable) for connecting to the S_0 ports 1-4 (see circuit board label)

② S_0 module: RJ-45 socket for connecting to the S_0 port 1 including LEDs for displaying the status of S_0 ports 1 and 2

③ S_0 module: RJ-45 socket for connecting to the S_0 port 3 including LEDs for displaying the status of S_0 ports 3 and 4

④ A connector for switching the operating mode on the S_0 ports (see circuit board label)

⑤ DIP switches for terminators on the S_0 ports 1-4 (see circuit board label)

⑥ A connector for attachment on the base circuit board

⑦ 8S_0 module: Terminal clamps (removable) for connecting to the S_0 ports 5-8 (see circuit board label)

⑧ 8S_0 module: Status display LEDs for S_0 ports 5-8 (see circuit board label)

⑨ DIP switch for terminators on the S_0 ports 5-8 (see circuit board label)

⑩ 4S_0 R module: RJ-45 socket for connecting to the S_0 ports 1-4 including LEDs for displaying the status (see label)

⑪ 8S_0 R module: RJ-45 socket for connecting to the S_0 ports 1-8 including LEDs for displaying the status (see label)

Note: *You can find the overview of a 4S0 module (Rev. 2) in the Installation and Commissioning Instructions of your old PBX.*

Changing the Operating Mode for Switchable Ports

Caution: *Electrostatic charges can destroy sensitive components.*

→ *Only a qualified electrician may open the casing and perform installation work within an open casing.*

→ *Divert electrostatic charges from yourself before touching the circuit boards with your hands or any tools. To do this, touch a metal object, preferably earthed, e. g. the earthing terminal of the PBX or a computer housing.*

Requirements

– Previous system planning

Note: *The S_0 ports 5-8 on the COMmander 8S_0 (R) module support only the operating mode S_0 internal.*

Steps to Take

1. Remove the jumper for the port to be switched.
2. Reinsert the jumper according to the desired operating mode. The correct jumper setting can be found on the circuit board label or the Fig. 4 on page 22.

   Note: *You can find the figure of the jumper setting on the COMmander 4S_0 module (Rev. 2) in the Installation and Commissioning Instructions of your old PBX.*

Fig. 4: Jumper setting on the COMmander 4S_0 R module (rev. 3) and COMmander 8S_0 R module

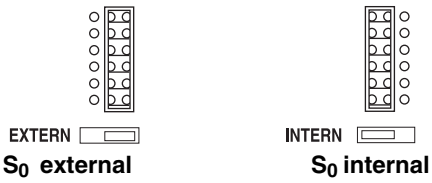

S_0 external **S_0 internal**

Switching Terminators

Caution: *Electrostatic charges can destroy sensitive components.*

→ *Only a qualified electrician may open the casing and perform installation work within an open casing.*

→ *Divert electrostatic charges from yourself before touching the circuit boards with your hands or any tools. To do this, touch a metal object, preferably earthed, e. g. the earthing terminal of the PBX or a computer housing.*

Requirements

– Previous system planning

– The following is a list of uses for the port in question (for enabling the terminators):
  - The PBX port in question is located at the beginning/end of a series of devices, for example, when laying an internal S_0 bus in one direction.
  - The PBX port in question is only connected to one device, for example, in a direct connection to an NTBA with a PBX connection.

– The following is a list of uses for the port in question (for disabling the terminators):
  - The PBX port in question is located in the middle of a series of devices, for example, when laying an internal S_0 bus in two directions.
  - The PBX port in question is connected to an existing socket, for example, to an NTBA with an external S_0 bus with terminators in the last socket.

Steps to Take

1. Switch on: Push both buttons on the DIP switch to be switched to the “on” position. See Fig. 5.

   Switching off: Push both buttons on the DIP switch to be switched to the “off” position. See Fig. 5.

Fig. 5: Switch setting on the S_0 module

Enabled **Disabled**

VoIP and VMF Module Overview (COMmander 8VoIP (R) Module, COMmander 16VoIP (R) Module, COMmander VMF (R) Module)

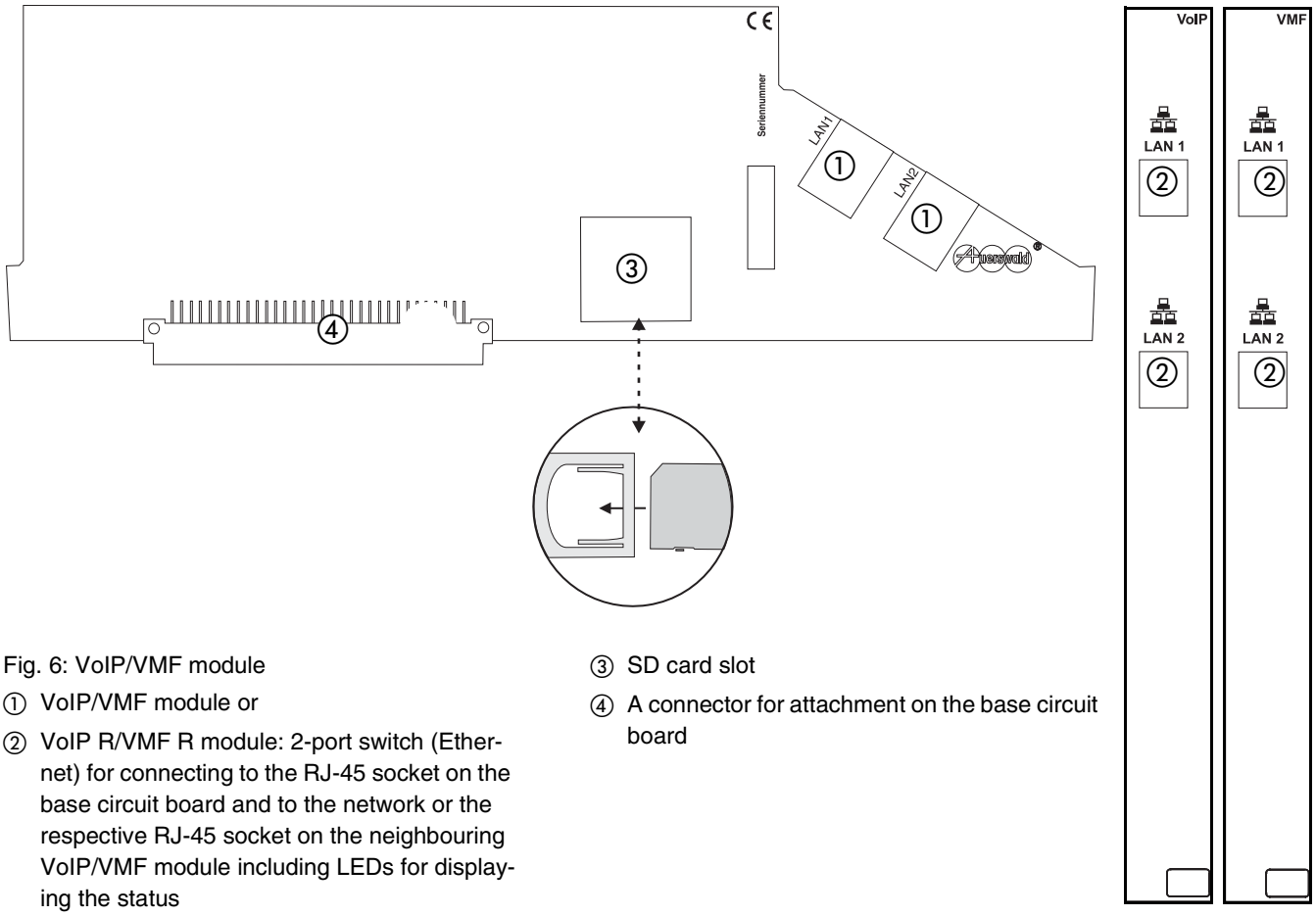

Fig. 6: VoIP/VMF module

① VoIP/VMF module or

② VoIP R/VMF R module: 2-port switch (Ethernet) for connecting to the RJ-45 socket on the base circuit board and to the network or the respective RJ-45 socket on the neighbouring VoIP/VMF module including LEDs for displaying the status

③ SD card slot

④ A connector for attachment on the base circuit board

Changing Memory Card

⚠ ***Caution:*** *In factory settings, the COMmander VMF (R) module is already equipped with a memory card. Your only have to exchange the memory card in case it is damaged.*
Removing the memory card from the PBX during operation is not permitted.

→ *COMmander 6000: Pull out the power plug of the PBX before commissioning a qualified electrician to open the casing to install the expansion module or perform switching or connecting services.*

→ *COMmander 6000R/RX: The Power button switches the voltage at the module expansion slots and on the main circuit board off. If the system is switched off, a qualified electrician can be commissioned to replace or install expansion modules.*
When installing or replacing a module, only touch the fixing components of the front plate where necessary. Do not insert any electrically conductive objects into the casing, since hazardous voltages continue to apply in the power supply unit of the system.

Note: *It is recommended to replace the memory card every two years. Use only recommended boards. Information can be found in the internet (see* ***www.auerswald.de*** *under* ***Service > Products > COMmander 6000 > FAQ****).*

Steps to Take

1. Unlock the memory card of the COMmander VMF (R) module by pressing lightly and remove on the slot.
2. Insert the memory card with the contacts directed upwardly first into the SD card slot of the COMmander VMF (R) Module.
3. To be able to use the memory card for the voice mail and fax function, you need to format it via the PBX (**Devices > Voice mail/fax boxes > Basic settings**).

$8U_{P0}$ Module Overview (COMmander $8U_{P0}$ / $8U_{P0}$ R Module)

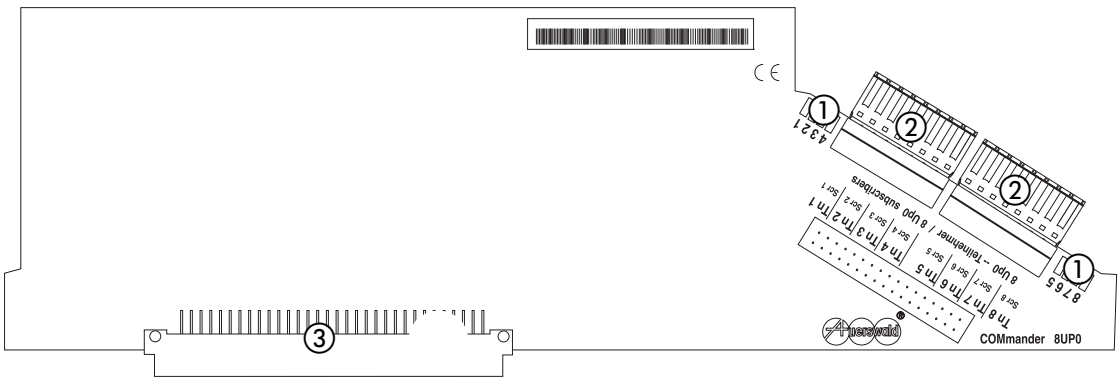

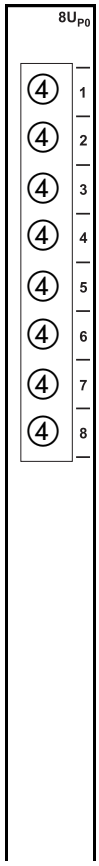

Fig. 7: $8U_{P0}$ module

① $8U_{P0}$ module: Status display LEDs for U_{P0} ports 1-8 (see circuit board label)

② $8U_{P0}$ module: Terminal clamps (removable) for connecting to the U_{P0} ports 1-8 (see circuit board label)

③ A connector for attachment on the base circuit board

④ $8U_{P0}$ R module: RJ-45 socket for connecting to the U_{P0} ports 1-8 including LEDs for displaying the status (see label)

8a/b Module Overview (COMmander 8a/b / 8a/b R Module)

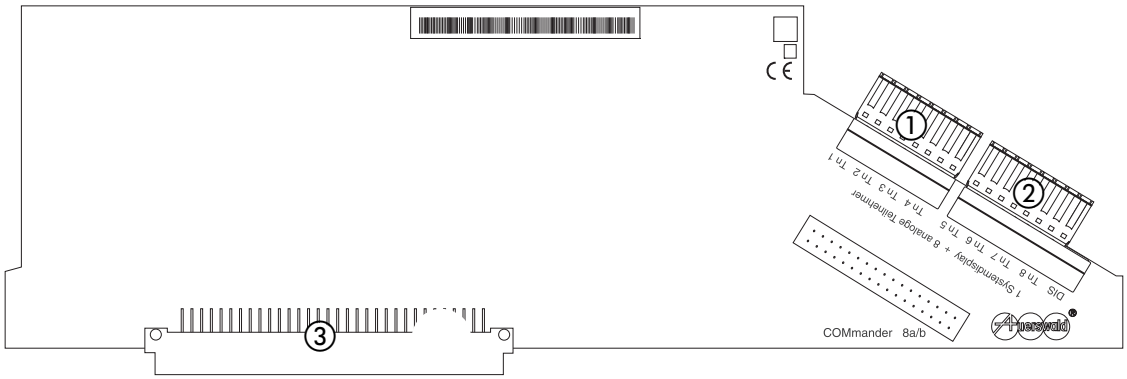

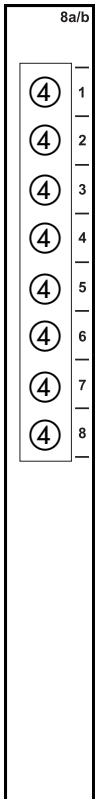

Fig. 8: 8a/b module

① 8a/b module: Terminal clamps (removable) for connecting to the internal a/b ports 1-4

② 8a/b module: Terminal clamps (removable) for connecting to the internal a/b ports 5-8

③ A connector for attachment on the base circuit board

④ 8a/b R module: RJ-45 socket for connecting to the internal a/b ports 1-8 (see label)

Preparation (COMmander 6000)

This section describes the preparations required before installing and commissioning the device. In addition, information is provided on how to open the casing and make changes, how to attach it to the wall, as well as how to install modules on the PBX (not included in the delivery).

In addition, information is given on how to close the casing again after installation work has been completed.

The overview of the base circuit board provides information to facilitate finding the various connection options.

Opening the Casing

Warning: *Improper handling of the device can result in life-threatening electrical shock.*

→ *Only a qualified electrician may open the casing and perform installation work within an open casing.*

Warning: *Touching voltage-carrying conductors or telephone connections may cause a life-threatening electric shock.*

→ *The PBX contains hazardous voltages, even outside of the power supply unit (for instance ringer voltages). Work on active, contact-hazardous parts is only permitted after creating a voltage-free state.*
Working close to active parts is only permitted if these parts are voltage-free or are protected against direct contact.

→ *Pull out the power plug of the PBX before commissioning a qualified electrician to open the casing to install the expansion module or perform switching or connecting services.*

→ *If available, also disconnect the devices from auxiliary power sources (for example, UPS).*

Warning: *Power surges, which can occur during electrical storms, can cause life-threatening electric shocks.*

→ *Therefore, do not mount the PBX during an electrical storm. Avoid disconnecting and connecting lines during an electrical storm.*

Requirements

– The unlocking tool included

Steps to Take

1. Push the unlocking tool into the opening on the upper edge of the cover. See Fig. 9.
2. Pull the tool a little towards yourself. See Fig. 9.

Fig. 9: Opening the casing

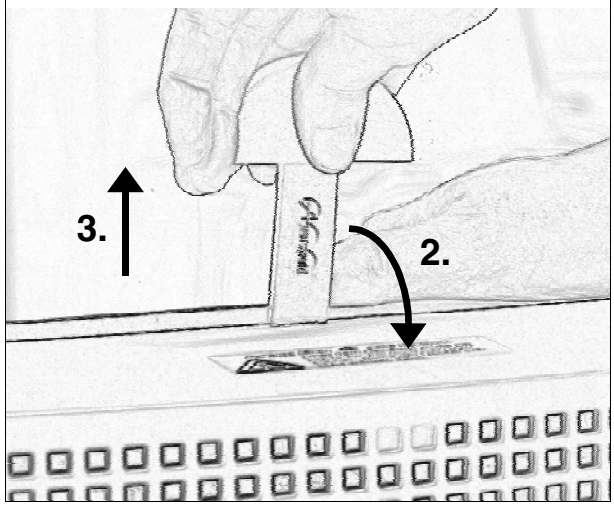

3. Hold this position and open the casing by pulling the unlocking tool upwards from the casing. When you do this, the cover is also pulled upwards. See Fig. 9.
4. Push the cover far enough (approx. 15 cm) that you can lift it out of the casing vertically without resistance.

Base Circuit Board Overview

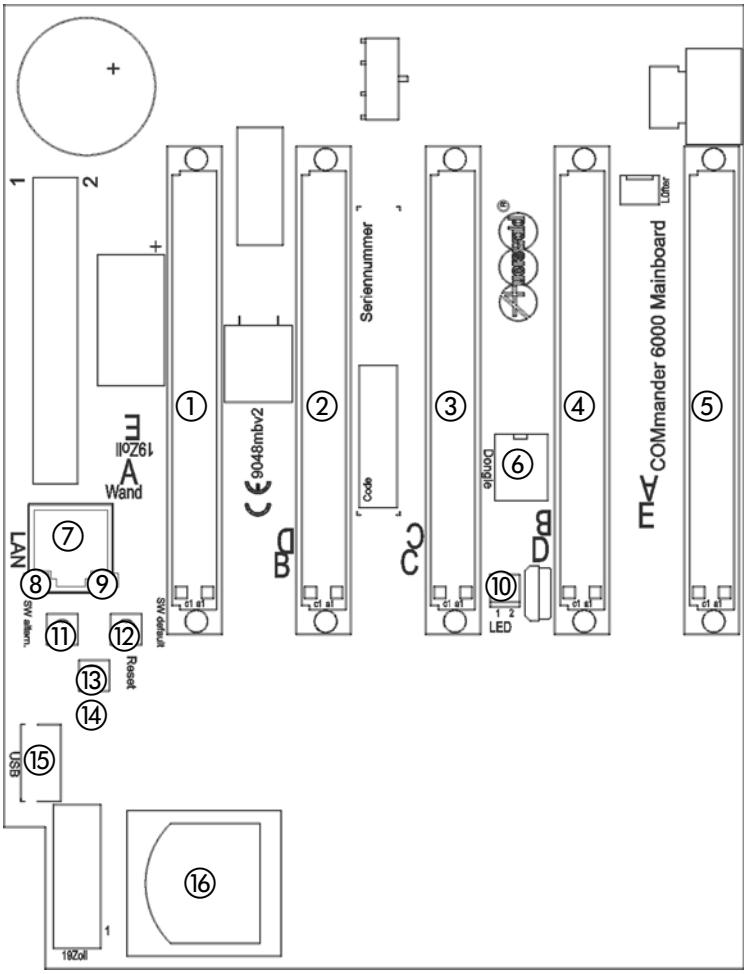

Fig. 10: COMmander 6000 base circuit board

① Module slot A for universal module use

② Module slot B for universal module use

③ Module slot C for universal module use

④ Module slot D for universal module use

⑤ Module slot E for universal module use

⑥ System dongle

⑦ RJ-45 socket (Ethernet) for connecting to a PC Or network

⑧ **LAN Link** LED

⑨ **LAN Activity** LED

⑩ Connector for connecting the casing and the LED (**Power** LED)

⑪ **SW altern.** button

⑫ **SW default** button

⑬ **Reset** button

⑭ **Status** LED

⑮ USB Host for a Printer Connection

⑯ SD card slot with memory card of the PBX

Caution: *The memory card of the PBX contains data which is necessary for the operation of the PBX.*

→ *Do not remove, mount, or format the memory card.*

→ *The memory card on the base circuit board should only be exchanged in the case of service jobs according to the directives of Auerswald service staff.*

Updating or Upgrading the PBX

Warning: *Touching the voltage carrying conductors or the telephone connections – including those on the modules – may cause a life-threatening electric shock.*

→ *The PBX contains hazardous voltages, even outside of the power supply unit (for instance ringer voltages). Work on active, contact-hazardous parts is only permitted after creating a voltage-free state.*
Working close to active parts is only permitted if these parts are voltage-free or are protected against direct contact.

→ *Pull out the power plug of the PBX before commissioning a qualified electrician to open the casing to install the expansion module or perform switching or connecting services.*

→ *If available, also disconnect the devices from auxiliary power sources (for example, UPS).*

Caution: *Electrostatic charges can destroy sensitive components.*

→ *Divert electrostatic charges from yourself before touching the circuit boards with your hands or any tools. To do this, touch a metal object, preferably earthed, e. g. the earthing terminal of the PBX or a computer housing.*

Requirements

– Previous system planning

– Upgrading: Module

Note: *Before inserting the module, first configure the required settings on the module. See Chapter Preparation (Modules) on page 20.*

Steps to Take

1. Insert the module: Guide the module between the two circuit board latches and press it vertically downwards to the base circuit board until it snaps in securely. See Fig. 11.

Pull out the module: Push the circuit board latch on the slanted side of the module a short distance away from the module and then using the other hand, simultaneously remove the module almost vertically from the base circuit board. See Fig. 12.

Note: *Make sure that the module is fastened on the edge centered in relation to the connector.*

Further Steps

▷ If a VMF or VoIP module is present, it must be connected to the base circuit board as described in Chapter Connecting the COMmander VoIP/VMF Modules on page 27.

▷ If one VMF and VoIP modules or several VoIP modules are present, they must be connected with each other and to the base circuit board.

Fig. 11: Insert the module

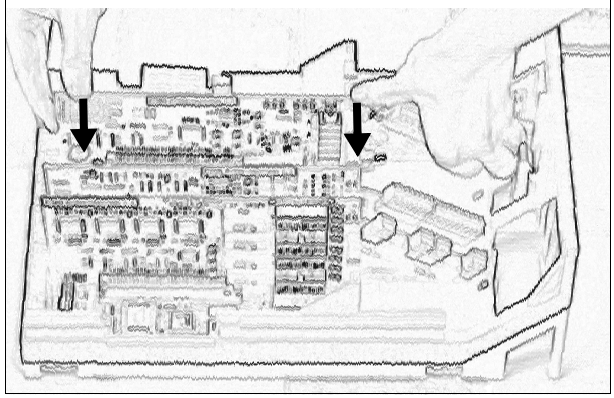

Fig. 12: Remove the module

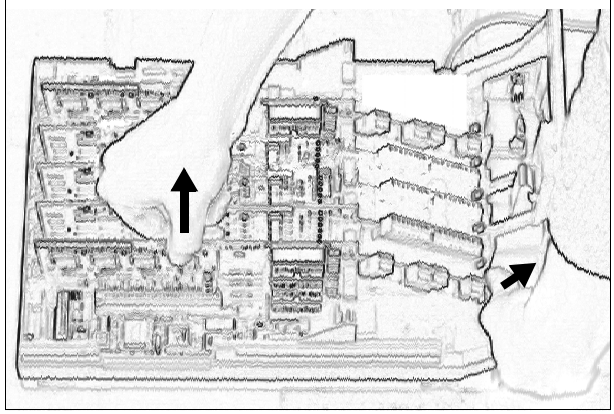

Connecting the COMmander VoIP/VMF Modules

Requirements

– Per module, the patch cable included in the delivery of the module

Steps to Take

1. Insert one end of the patch cable into the RJ-45 socket on the base circuit board.

2. Insert the other end of the patch cable into one of the RJ-45 sockets on the adjoining COMmander VoIP module or COMmander VMF module.

3. For additional VoIP/VMF modules: Insert one end of the patch cable into the RJ-45 socket still available on the first VoIP/VMF module.
4. Insert the other end of the patch cable in one of the RJ-45 sockets on the second VoIP/VMF module.
5. Accordingly, repeat step 3 + 4 for each additional module.

   Note: *The available RJ-45 socket on the last VoIP/VMF module is used to connect to the network.*

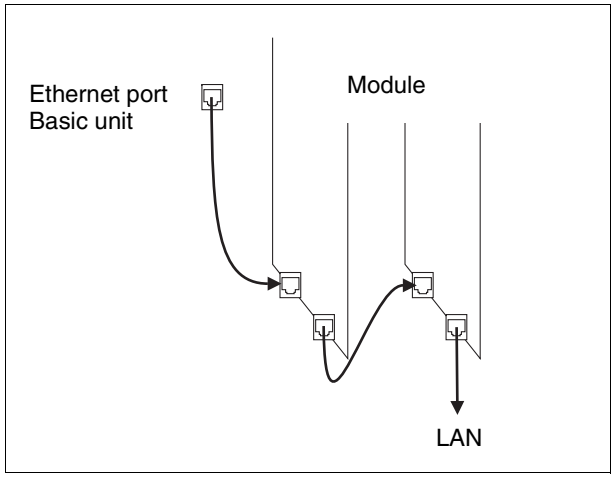

Mounting the Casing on the Wall

To mount the casing on the wall, several steps have to be taken:

- Disconnecting the mounting frame from the mounting rack
- Opening the cable channels in the mounting frame
- Mounting the mounting frame on the wall
- Reinstalling the mounting rack

Caution: *Overheating can damage or destroy the PBX.*

→ *Note the threshold values in the technical data for ambient temperature.*

→ *Make sure that heat produced by the device can be adequately vented into the environment.*

→ *Never cover the vent slots of the wall casing.*

Disconnecting the Mounting Frame from the Mounting Racks

Warning: *Touching voltage-carrying conductors or telephone connections may cause a life-threatening electric shock.*

→ *Only a qualified electrician may open the casing and perform installation work within an open casing.*

→ *Pull out the power plug of the PBX before commissioning a qualified electrician to open the casing to separate the casing components.*

→ *If available, also disconnect the devices from auxiliary power sources (for example, UPS).*

Steps to Take

1. Use the thumb of one hand to loosen the light grey latch in the lower part of the casing. See Fig. 13.
2. Use the other hand to pull the blue mounting rack diagonally upwards away from the light grey mounting-frame. See Fig. 13.

Fig. 13: Disconnect the mounting racks

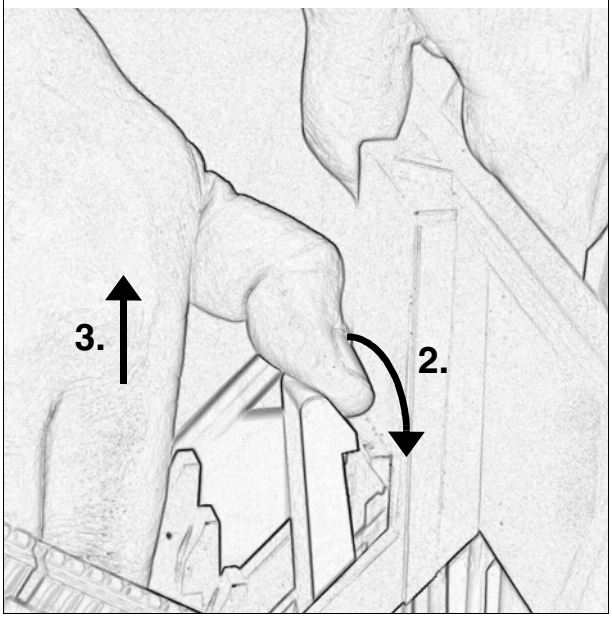

Opening the Cable Channels in the Mounting Frame

Steps to Take

1. Pull the small plastic covers out of the opening on the side out of which the cable should exit. See Fig. 14.

   Note: *If the integrated USB casing socket on the left side is to be used to connect a PC, you cannot use this opening as a cable channel. If necessary, as crews can be loosened and the socket can be turned around and fastened.*

Fig. 14: Open the cable channels

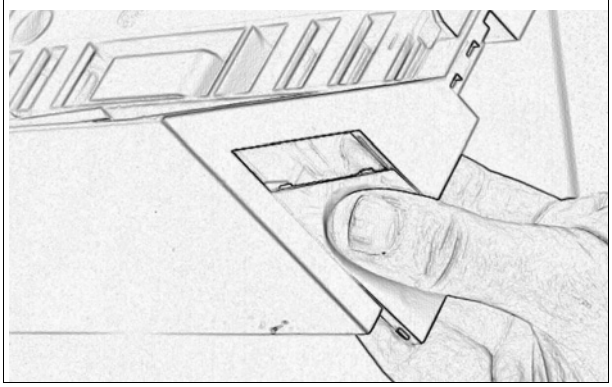

Mounting the Mounting Frame on the Wall

Requirements

– Prepared mounting frame:
  - Disconnected from the mounting rack
  - Cable channels opened
– Hand tools and material:
  - Drill and screw driver
  - The accompanying screws and dowels
– The existing connections in the immediate vicinity of the mounting location:
  - A freely accessible 230 V Schuko socket
  - NTBA/NTPM of the network provider; for great distances, hard wiring between the devices is necessary.

Warning: *Liquid entering the casing can cause life-threatening electric shocks or damage/destroy the PBX.*

→ *Only operate the device in closed, dry rooms.*

Caution: *Overheating can damage or destroy the system.*

→ *Note the ambient temperature values indicated in the technical specifications.*

→ *Make sure that heat produced by the device can be adequately vented into the environment. Do not install the system in a cabinet without adequate air circulation.*

Important: *Mechanical loads and electro-magnetic fields can impair PBX operation.*

→ *Avoid mechanical loads (for example, vibrations).*

→ *Avoid proximity to devices that generate electro-magnetic fields or react sensitively to them (e. g. radio receivers, private mobile radio devices, amateur radio sets, mobile phones, DECT systems, or similar).*

→ *Protect the device from soiling, excessive dust and condensation.*

Steps to Take

1. Hold the mounting frame vertically on the area where the device is to be mounted and place marks where the mounting holes are to be drilled into the wall. See Fig. 15.

   Important: *A minimum of 150 mm clearance must remain about the casing in order to remove and install the cover.*

Fig. 15: Mark the drill holes

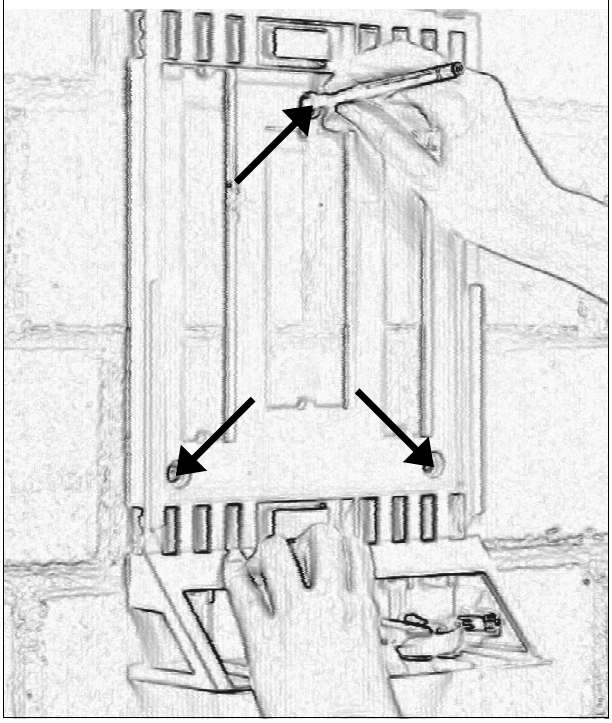

2. Drill the mounting holes (∅ 6 mm) and insert dowels into the holes.
3. Fasten the mounting frame on the wall using the screws.

Reinstalling the Mounting Rack

Requirements

– Mounting frame fastened on the wall

Steps to Take

Note: *To prevent the cable in the USB casing socket from becoming pinched, roll up the cable and place it near the socket in the cable space.*

1. Hold the mounting rack diagonally with the upper edge towards the wall and install it at the top in the mounting frame. See Fig. 16 on page 30.

2. In addition, press the lower part of the mounting rack onto the mounting frame until the lock snaps in.

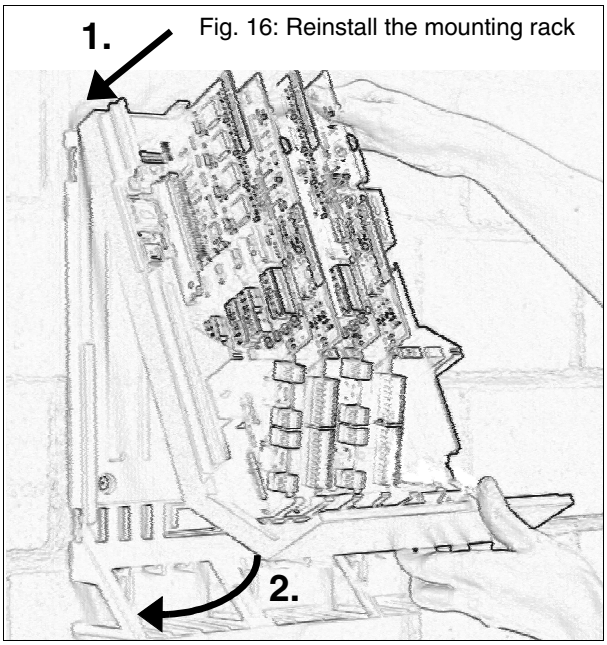

Fig. 16: Reinstall the mounting rack

Connecting the Earthing

Requirements

– Hand tools and material:
  - Screw driver
  - Connecting cable with at least 2.5 mm² conductor cross-section

– Earth wire in the immediate vicinity of the mounting location

Warning. *Improper handling of the device can result in life-threatening electrical shock.*

→ *Only a qualified electrician may open the casing and perform installation work within an open casing.*

→ *Mount the PBX in the immediate vicinity of an earth wire (potential compensation bar of the house installation or protective earth conductor).*

→ *Only a fixed installation is allowed for the connection of the earthing terminal of the PBX to the potential compensation bar of the house installation or the protective earth conductor. Plug connections are not allowed.*

Warning. *DTouching voltage-carrying conductors or telephone connections may cause a life-threatening electric shock.*

→ *The PBX contains hazardous voltages, even outside of the power supply unit (e.g. ringer voltages). Work on active, contact-hazardous parts is only permitted after creating a voltage-free state.*
Working close to active parts is only permitted if these parts are voltage-free or are protected against direct contact.

→ *Pull out the power plug of the PBX before commissioning a qualified electrician to open the casing to perform switching or connecting services.*

→ *If available, also disconnect the devices from auxiliary power sources (for example, UPS).*

Steps to Take

- Connect the earthing terminal on the main cirnuit board of the PBX via the connecting cable to the potential compensation bar of the house installation or the protective earth conductor. See Fig. 17.

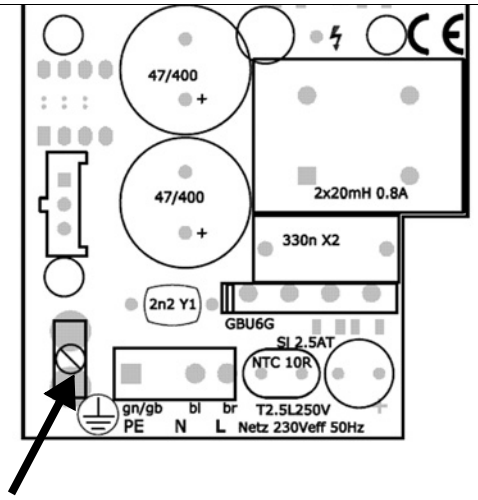

Fig. 17: Earthing terminal on main circuit board

Closing the Casing

Requirements

– After installation, cables carefully reinserted into the cable space

Note: *This mounting frame is equipped with fastening hooks. See* Fig. 18.

Fig. 18: Fastening hooks

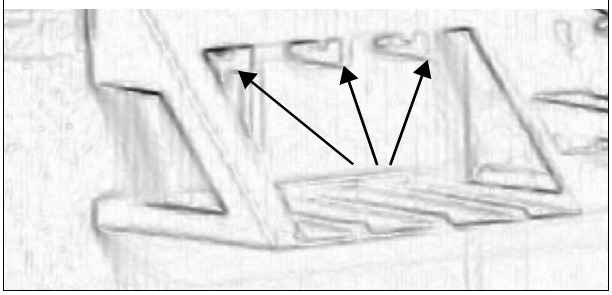

Steps to Take

1. Place the casing cover approx. 15 cm towards the top by sliding it straight onto the casing. See Fig. 19.
2. Finally, pull the cover vertically downwards until it is in the correct position.

Fig. 19: Closing the casing

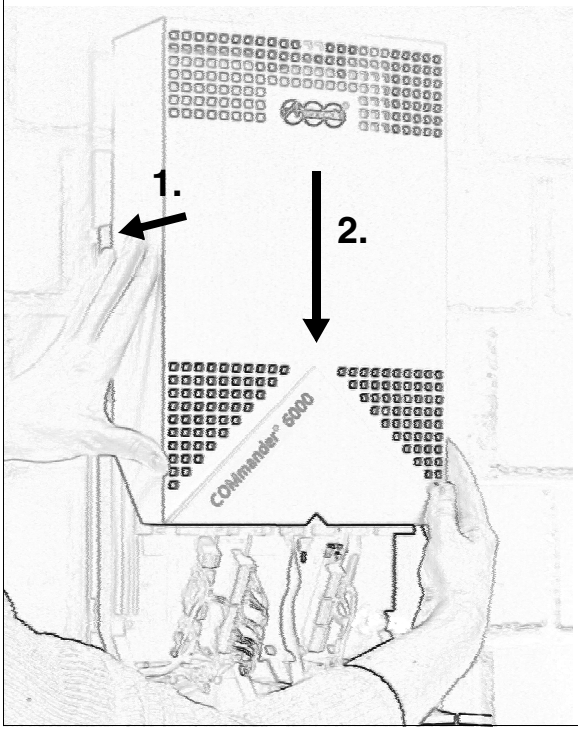

Preparation (COMmander 6000R/RX)

This section describes the preparations required before installing and commissioning the device. In addition, information is provided on how to make changes and mount it in a rack as well as how to upgrade the PBX with modules (not included in the delivery).

Overviews of base circuit board as well as the connection areas on the front panel should facilitate finding the various connection options.

COMmander 6000R/RX Overview

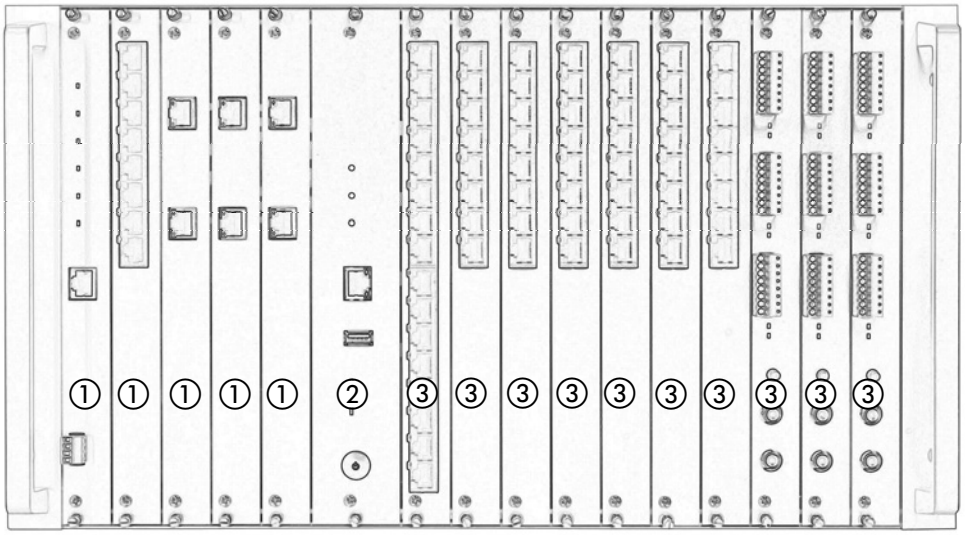

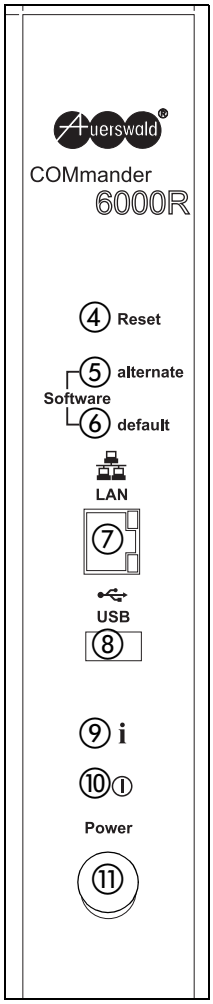

Fig. 20: Casing and front panel of the CPU COMmander 6000R/RX:

① Module slots A - E for universal module use

② Slot CPU

③ COMmander 6000R with Xtension/ COMmander 6000RX: Module slots F- O for universal module use

④ **Reset** button

⑤ **Software alternate** button

⑥ **Software default** button

⑦ RJ-45 socket (Ethernet) for connecting to a PC or network with **LAN-Link** LED (below) and **LAN-Activity** LED (above)

⑧ USB Host for a Printer Connection

⑨ **Status** LED

⑩ **Power** LED

⑪ **Power** button to switch the 230 V system voltage

Note: *The overviews of the module front panels can be found in the* *Chapter Preparation (Modules) on page 20*.

Updating or Upgrading the PBX

Warning: *Touching the voltage carrying conductors or the telephone connections – including those on the modules – may cause a life-threatening electric shock.*

→ *The PBX contains hazardous voltages, even outside of the power supply unit (for instance ringer voltages). Work on active, contact-hazardous parts is only permitted after creating a voltage-free state.*

Working close to active parts is only permitted if these parts are voltage-free or are protected against direct contact.

→ *The Power button switches the voltage at the module expansion slots and on the main circuit board off. If the system is switched off, a qualified electrician can be commissioned to replace or install expansion modules.*
When installing or replacing a module, only touch

the fixing components of the front plate where necessary. Do not insert any electrically conductive objects into the casing, since hazardous voltages continue to apply in the power supply unit of the system.

→ *If available, also disconnect the devices from auxiliary power sources (for example, UPS).*

Caution: *Electrostatic charges can destroy sensitive components.*

→ *Divert electrostatic charges from yourself before touching the circuit boards with your hands or any tools. To do this, touch a metal object, preferably earthed, e. g. the earthing terminal of the PBX or a computer housing.*

Requirements

– Previous system planning

– Upgrading: Module

Note: *Before inserting the module, first configure the required settings on the module.*

– Screwdriver

Steps to Take

1. Remove the blind panel or the old module:

   Blind panel: Loosen the screws and remove the blind panel.

   Module: First, loosen the upper screw. Then, loosen the thumb screw and remove the module by pulling the thumb screw.

2. Slide the new module into the two guide rails until the plug-in connector snaps into the place.

3. Use the corresponding screws to screw the module.

4. Close the remaining aperture with one or several blind panel(s).

Further Steps

▷ If you have one VMF and VoIP module or several VoIP modules, these have to be connected to each other and to the RJ-45 socket (Ethernet) of the CPU front panel. See Chapter Connecting the VoIP/VMF R Modules on page 33.

Connecting the VoIP/VMF R Modules

Requirements

– Per module, the patch cable included in the delivery of the module

Steps to Take

1. Insert one end of the patch cable into the RJ-45 socket (Ethernet) of the CPU front panel.

2. Insert the other end of the patch cable into one of the RJ-45 sockets on the adjoining VoIP or VMF R module.

3. For additional VoIP/VMF R modules: Insert one end of the patch cable into the RJ-45 socket still available on the first module.

4. Insert the other end of the patch cable in one of the RJ-45 sockets on the second module.

5. Accordingly, repeat step 4 + 5 for each additional module.

   Note: *The free RJ-45 socket on the last VoIP/VMF R module is used for connecting to the network.*

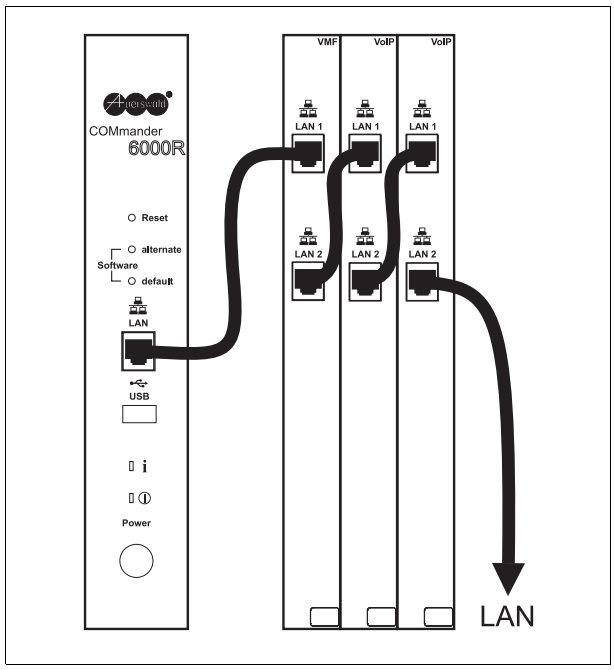

RJ-45 Socket Assignment on the COMmander $4S_0$ R, $8S_0$ R, $8U_{P0}$ R or 8a/b R module

Fig. 21: S_0 port assignment I

① not in use
② not in use
③ 2a
④ 1a
⑤ 1b
⑥ 2b
⑦ not in use
⑧ not in use

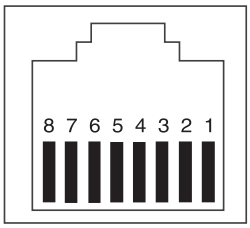

Fig. 22: Assignment of the a/b port or U_{P0} port

① not in use
② not in use
③ not in use
④ a
⑤ b
⑥ not in use
⑦ not in use
⑧ not in use

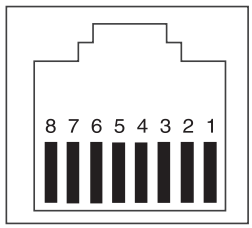

RJ-45 Socket Assignment on the COMmander S_{2M} R module

Fig. 23: RJ-45 socket assignment

① RX-
② RX+
③ not in use
④ TX-
⑤ TX+
⑥ not in use
⑦ UB-
⑧ UB+
Screen

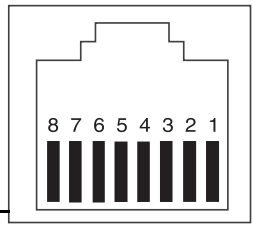

Connecting the Earthing

Requirements

– Hand tools and material:
  - Screw driver
  - Connecting cable with at least 2.5 mm² conductor cross-section

– Earth wire in the immediate vicinity of the mounting location (potential compensation bar of the house installation or protective earth conductor)

Warning. *Umproper handling of the device can result in life-threatening electrical shock.*

→ *Only a fixed installation is allowed for the connection of the earthing terminal of the PBX to the potential compensation bar of the house installation or the protective earth conductor. Plug connections are not allowed.*

Steps to Take

- Connect the earthing terminal on the back of the PBX via the connecting cable to the potential compensation bar of the house installation or the protective earth conductor.

Fig. 24: Earthing terminal on the back of the PBX

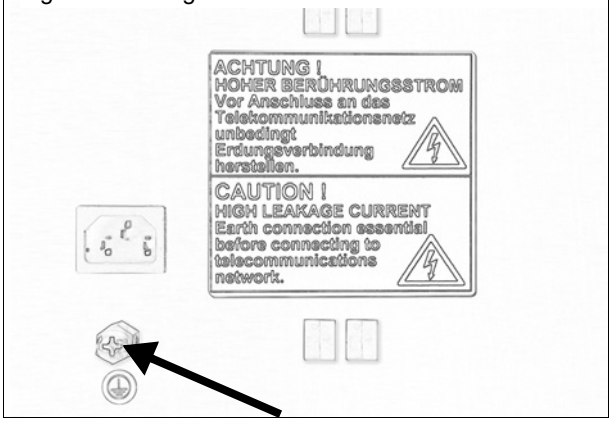

Mount the Casing in the Rack

Requirements

– Hand tools and material:
  - Screwdriver
  - Screws

– The existing connections in the immediate vicinity of the mounting location:
  - A freely accessible 230 V Schuko socket
  - NTBA/NTPM of the network provider; for great distances, hard wiring between the devices is necessary

Warning: *Liquid entering the casing can cause life-threatening electric shocks or damage/destroy the PBX.*

→ *Only operate the device in closed, dry rooms.*

Caution: *Overheating can damage or destroy the system.*

→ *Note the ambient temperature values indicated in the technical specifications.*

→ *Make sure that heat produced by the device can be adequately vented into the environment. Do not install the system in a cabinet without adequate air circulation.*

→ *Make sure not to cover the fan on the rear side of the casing.*

Important: *Mechanical loads and electro-magnetic fields can impair PBX operation.*

→ *Avoid mechanical loads (for example, vibrations).*

→ *Avoid proximity to devices that generate electro-magnetic fields or react sensitively to them (e. g. radio receivers, private mobile radio devices, amateur radio sets, mobile phones, DECT systems, or similar).*

→ *Protect the device from soiling, excessive dust and condensation.*

Steps to Take

1. Push the casing into the rack.
2. Fasten the casing to the right and to the left with the bracket and the four screws.

Connecting to the Network Provider

This section describes how to connect to the NTBA or to the NTPM of the network provider. If at all possible, it is determined whether the device is to be connected directly or the lines are to be laid permanently. In addition, this section provides information on how to connect the PBX to the Internet (VoIP) using a router. The diagram at the end gives an overview of how to set up the connection for an ISDN connection and DSL (Fig. 25).

Warning: *Touching voltage-carrying conductors or telephone connections may cause a life-threatening electric shock.*

→ *The PBX contains hazardous voltages, even outside of the power supply unit (for instance ringer voltages). Work on active, contact-hazardous parts is only permitted after creating a voltage-free state.*
Working close to active parts is only permitted if these parts are voltage-free or are protected against direct contact.

→ *COMmander 6000: Pull out the power plug of the PBX before commissioning a qualified electrician to open the casing to install the expansion module or perform switching or connecting services.*

→ *If available, also disconnect the devices from auxiliary power sources (for example, UPS).*

Important: *Improper use may cause, for example, functional restrictions or interference, the destruction of the device or, in a worst case scenario, personal injury.*

→ *Only connect equipment that is compatible with the proper use of the PBX.*

Note: *For the COMmander 6000R/RX, no connections are made directly to the module itself but rather via the connector panel on the front panel. The socket assignments on the front panel are described as of Page 34.*

Fig. 25: ISDN connection and DSL

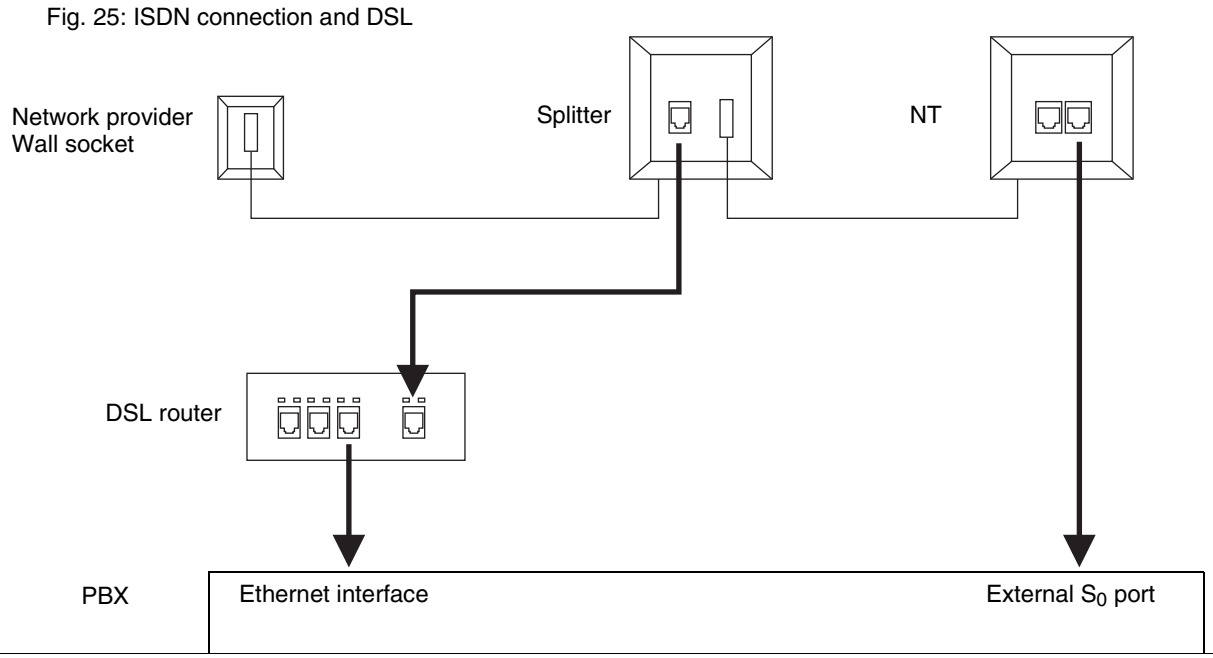

Connecting ISDN (NTBA) Directly to the External S_0 Port

Requirements

- S_0 module and connection cable (included in the package) .
- Enabled operation mode “S_0 external” on the S_0 port in question. See Page 22.
- Enable the terminators at both ends of the connection – in the NTBA and in the PBX on the external S_0 port in question. See Page 22.
- Minimal distance between the devices

Note: *If the NTBA is relatively far away from the PBX, a cable must first be laid.*

Steps to Take

1. Insert one end of the ISDN cable into the RJ-45 socket on the external S_0 port.
2. Insert the other end of the ISDN cable into the RJ-45 socket on the NTBA.

Installing Cable Between the External S_0 Port and ISDN (NTBA)

Warning: *Power surges, which can occur during electrical storms, can cause life-threatening electric shocks or damage/destroy the PBX.*

→ *Let a qualified electrician lay all the cables inside the building.*

Requirements

– S_0 module

– Enabled operation mode "S_0 external" on the S_0 port in question. See Page 22.

– Enable the terminators at both ends of the connection – in the NTBA and in the PBX on the external S_0 port in question. See Page 22.

– The distance/line length between the devices depends on the connection type:
  - Max. 150 m for a Point-to-Multipoint connection
  - Max. 1000 mm for a Point-to-Point connection

– Installation cable (for example, J Y (St) Y 2x2x0.6) with the following characteristics:
  - 4-core
  - Unscreened; however: screened for unfavourable conditions, for example, near a strong transmitter or an electrical power line
  - Preferably star quad stranding

Note: *If you would like to install an external S_0 bus with wall sockets, please refer to Chapter Connecting Cable and Wall Sockets to the Internal S_0 Port (Internal S_0 Bus) on page 42.*

Steps to Take

1. Attach the wires to the four terminal clamps in the NT.

Note: *When assigning the individual wires, orient yourself with the identifiers subsequently listed or refer to VDE 0815 when identifiers deviate.*

		Cable with two twin wires	Cable with star quad
Phys. circuit/ pair 1	a1	Red	Without ring
	b1	black	Single rings, 17 mm spacing
Phys. circuit/ pair 2	a2	White	Double rings, 34 mm spacing
	b2	yellow	Double rings, 17 mm spacing

2. Connect the NTBA to the four terminal clamps on the external S_0 port. See Fig. 26.

Fig. 26: Wire up the NTBA and the external S_0 port

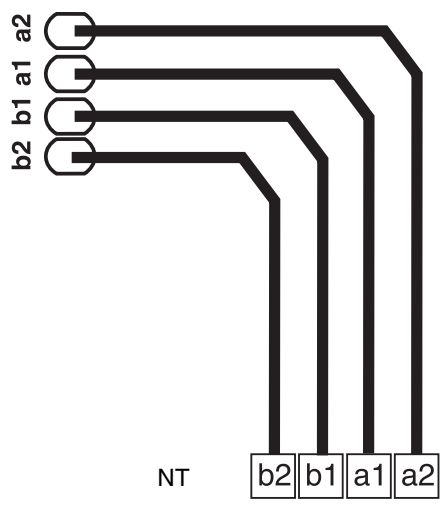

Connecting the Primary Rate Interface (NTPM) Directly to the S_{2M} Port

Requirements

– S_{2M} module

– Enabled NTPM operating voltage on the S_{2M} module in as far as the NTPM is not powered by a separate power plug. See Page 21.

Note: *When using this operating voltage, the UB+ and UB- contacts on the S_{2M} module must be connected to the NTPM.*

– NTPMX-GE (NTBA with RJ-45 socket)

– Minimal distance between the devices

– Connection cable with RJ-45 connectors at both ends. The RJ-45 socket assignment on the S_{2M} module is shown in Fig. 27.

Steps to Take

1. Insert one end of the connection cable into the RJ-45 socket on the S_{2M} port.

2. Insert the other the end of the connection cable into the RJ-45 socket on the NTPM.

Fig. 27: The RJ-45 socket assignment on the S_{2M} module

① RX-
② RX+
③ Available
④ TX-
⑤ TX+
⑥ Available
⑦ UB-
⑧ UB+

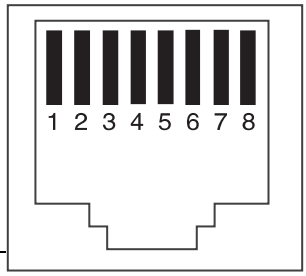

Installing Cable Between S_{2M} Port and Primary Multiplex Interface (NTPM)

Warning: *Power surges, which can occur during electrical storms, can cause life-threatening electric shocks or damage/destroy the PBX.*

→ *Let a qualified electrician lay all the cables inside the building.*

Note: *This type of connection is only available for the COMmander 6000.The necessary terminal clamps are not provided on the front panel of the COMmander 6000R/RX.*

Requirements

– S_{2M} module

– Enabled NTPM operating voltage on the S_{2M} module in as far as the NTPM is not powered by a separate power plug. See Page 21.

Note: *When using this operating voltage, the UB+ and UB- contacts on the S_{2M} module must be connected to the NTPM.*

– Depending on the manufacturer and the local conditions for one of the following NTPMs:
  - NTPM (NTBA with connection plate)
  - NTPMKU (NTBA with T-shaped mounting element and copper connection)
  - NTPMKU (NTBA with T-shaped mounting element and optic fibre connection)

– Distance/line length between devices - maximum of 100 m

– Installation cable (for example, J Y (St) Y nx2x0.6) with the following characteristics:
  - 4-core or 6-core when using the NTPM operating voltage on the S_{2M} module
  - unscreened; however: screened for unfavourable conditions, for example, near a strong transmitter or an electrical power line

Steps to Take

1. Attach the wires to the four terminal clamps in the NTPM.

   Note: *Refer to the NTPM terminal diagram in the documentation provided by the manufacturer.*

2. Connect the NTPM to the terminal clamps on the S_{2M} ports. See Fig. 28.

Fig. 28: Wire the NTPM and the S_{2M} port.

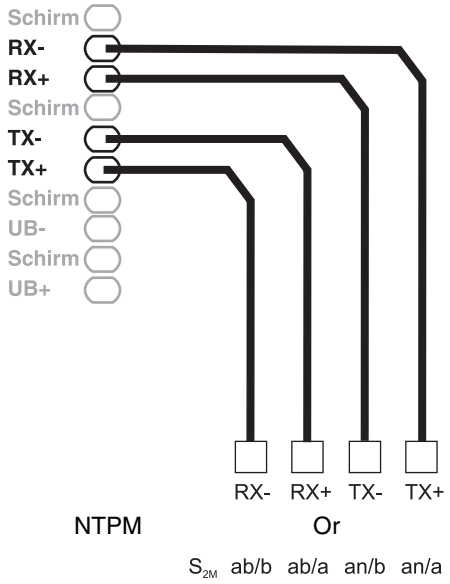

Connecting the Ethernet Interface to the Internet

Important: *If you would like to integrate the PBX into an existing network, please contact the system administrator responsible for this. Making changes to an existing network may cause considerable malfunctions. In addition, please note the PBX factory settings for the Ethernet configuration described on Page 50.*

Requirements

– Minimal distance between the devices

– Broadband Internet connection (for example, DSL router, TV cable router)

– Existing network (LAN) with the following characteristics:

  - Data transmission rate 100 Mbit/s

  Note: *For VoIP data communication in combination with the transmission of limited amounts of data, a data transmission rate in the LAN of 10 Mbit/s is sufficient under certain circumstances. For VoIP data communication in combination with the transmission of large amounts of data (for example, downloads), we recommend upgrading to a data transmission rate of 100 Mbit/s. For this purpose, replace not only all of the active network components (for example, the switch and router) but also all of the passive network components (for example, cables and wall sockets). For reliable support of 100 Mbit/s, you need cables and wall sockets of at least Category 5 (CAT5).*

  - To use DiffServ to prioritize speech packets: DiffServ support of all active network components available and enabled
  - A router that is specifically designed for VoIP data communication (“SIP aware”)

  Note: *If this is not the case, several of the ports on the router necessary for VoIP data communication must be enabled (RTP port and SIP-UDP ports) (“Port Forwarding”). A list of the ports used in the PBX can be found in the configuration manager on the PBX under* ***Overview > Ports****.*

  Important: *Opening a port on the NAT-Router poses a danger. Therefore additional measures for protection have to be taken.*

– Patch cable

Steps to Take

1. Insert the end of the cable into the Ethernet socket on the PBX.
2. Insert the other end of the cable into the output socket on the router or into an existing network outlet.

   Note: *To connect the DSL router to the network provider, please refer to the documentation provided by the network provider included with the router. See also Fig. 25 on page 36.*

Further Steps

▷ Configure the necessary network settings on the router and/or on the PBX at the end of commissioning. See Page 49.

Connecting Analogue End Devices

This section describes how to connect different analogue end devices to the a/b port of a COMmander 8a/b module. If at all possible, it is determined whether the device is to be connected directly or the lines are to be laid permanently.

Warning: : *Touching voltage-carrying conductors or telephone connections may cause a life-threatening electric shock.*

→ *The PBX contains hazardous voltages, even outside of the power supply unit (for instance ringer voltages). Work on active, contact-hazardous parts is only permitted after creating a voltage-free state.*
Working close to active parts is only permitted if these parts are voltage-free or are protected against direct contact.

→ *COMmander 6000: Pull out the power plug of the PBX before commissioning a qualified electrician to open the casing to install the expansion module or perform switching or connecting services.*

→ *If available, also disconnect the devices from auxiliary power sources (for example, UPS).*

Important: *Improper use may cause, for example, functional restrictions or interference, the destruction of the device or, in a worst case scenario, personal injury.*

→ *Only connect equipment that is compatible with the proper use of the PBX.*

Note: *For the COMmander 6000R/RX, no connections are made directly to the module itself but rather via the connector panel on the front panel. The socket assignments on the front panel are described as of* *Page 34*.

Connecting Analogue End Devices Directly to the Internal a/b Port

Important: : *Connecting end devices directly is only possible on COMmander 6000R/RX.*

Requirements

– Minimal distance between the devices

Note: : *If the end device is placed a considerable distance away from the PBX, the cable and the wall sockets must be permanently installed. See* *Page 40*.

– A commercially-available RJ45-TAE adapter

Steps to Take

1. Connect the end device to the telephone jacks of the adapter.
2. Connect adapter to the RJ-45 socket that belongs to the internal a/b port.

Installing Cables and Wall Sockets for the Internal a/b Port

Warning: *Power surges, which can occur during electrical storms, can cause life-threatening electric shocks or damage/destroy the PBX.*

→ *Let a qualified electrician lay all the cables inside the building.*

→ *Do not use the a/b ports to connect external private branch exchanges.*

Note: *For a structured cable installation configured on the COMmander 6000R/RX, CAT5 cables and CAT5 wall sockets are used instead of the cables and wall sockets listed here. To connect an analogue device, a commercially-available RJ-45-TAE adapter is required.*

Important: *For structured cable installation on a COMmander 6000R/RX, the line length all of the applicable end devices must be taken into account.*

Requirements

– Installation cable (for example, J Y (St) Y 2x2x0.6) with the following characteristics:
  - One twisted pair per a/b port
  - Unscreened; however: screened for unfavourable conditions, for example, near a strong transmitter or an electrical power line

– A TAE jack with the following characteristics:
  - For telephones or combination fax/answering machines, a single TAE jack with F-coding (a socket labelled with an “F”)
  - For fax machines, modems and answering machines, a TAE jack that also has a socket with N-coding.

Note: *Outside of Germany, use RJ-45 sockets or the analogue wall sockets normally used in the country in question.*

– Distance/line length between the devices depends on the cable used:
  - Maximum 800 m for a cable with a pair diameter of 0.6 mm

Steps to Take

1. Lay the line.

   Note: *Prevent interference. Avoid laying long lengths of parallel lines, especially next to mains. Twist the pairs.*

2. Attach the wires to the two terminal clamps in the internal a/b port. See Fig. 29 on page 41.

3. Connect the wall sockets to the terminal clamps in the internal a/b port. See Fig. 29.

Further Steps

▷ Connect the end devices to the wall sockets.

Note: *For TAE jacks, insert the connection plug for the telephones or combination fax/answering machines into the socket labelled with "F" and insert the connection plug of the remaining devices into the socket labelled with "N".*

Fig. 29: Wall sockets on the internal a/b port

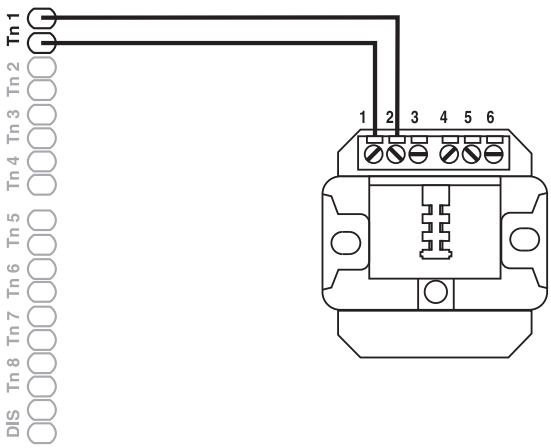

Connecting ISDN End Devices

This section describes how to connect different ISDN end devices to the S_0 or U_{P0} port of a COMmander 4/8S_0 (R) or COMmander 8U_{P0} (R) module. If at all possible, it is determined whether the device is to be connected directly or the lines are to be laid permanently.

Warning: *Touching voltage-carrying conductors or telephone connections may cause a life-threatening electric shock.*

→ *The PBX contains hazardous voltages, even outside of the power supply unit (for instance ringer voltages). Work on active, contact-hazardous parts is only permitted after creating a voltage-free state.*
Working close to active parts is only permitted if these parts are voltage-free or are protected against direct contact.

→ *COMmander 6000: Pull out the power plug of the PBX before commissioning a qualified electrician to open the casing to install the expansion module or perform switching or connecting services.*

→ *If available, also disconnect the devices from auxiliary power sources (for example, UPS).*

Important: *Improper use may cause, for example, functional restrictions or interference, the destruction of the device or, in a worst case scenario, personal injury.*

→ *Only connect equipment that is compatible with the proper use of the PBX.*

Note: *For the COMmander 6000R/RX, no connections are made directly to the module itself but rather via the connector panel on the front panel. The socket assignments on the front panel are described as of* *Page 34**.*

Connecting ISDN End Devices Directly to the Internal S_0 Port

Prerequisite

– Enabled operation mode "S_0 internal" on the S_0 port in question. See Page 22.

– In the PBX, enabled the terminators on the internal S_0 port in question. See Page 22.

– Minimal distance between the devices Maximum length of the connecting cables to be used: 10 m.

Note: *If the end device is placed a considerable distance away from the PBX, the cable and the wall sockets must be permanently installed. See* *Page 42**.*

– COMmander 6000: Using the S_0 ports 1 or 3

Note: *The other S_0 ports on the S_0 modules are not equipped with a RJ-45 socket.*

– For connecting multiple end devices on one internal S_0 port: one ISDN multiplug

Note: *The Auerswald ISDN Multiplug is available for this type of wiring as optional accessories in specialised stores.*

Steps to Take

1. Single end device: Connect the end device to the RJ-45 socket on the internal S_0 port.

   Multiple end devices: Connect the ISDN multiplug on the RJ-45 socket that belongs to the internal S_0 port.

2. Multiple end devices: Connect the end devices to the ISDN multiplug.

Further Steps

▷ To finish commissioning, you need to set up an internal phone number for each end device in the configuration manager.

Connecting Cable and Wall Sockets to the Internal S_0 Port (Internal S_0 Bus)

Warning: *Power surges, which can occur during electrical storms, can cause life-threatening electric shocks or damage/destroy the PBX.*

→ *Let a qualified electrician lay all the cables inside the building.*

Note: *For a structured cable installation configured on the COMmander 6000R/RX, CAT5 cables and CAT5-wall sockets are used instead of the cables and wall sockets listed here. Instead of terminators installed in the wall sockets, pluggable bus connections (RJ-45 jacks with integrated terminators) are used.*

Important: *For structured cable installation on a COMmander 6000R/RX, the line length all of the applicable end devices must be taken into account.*

Requirements

– Enabled operation mode "S_0 internal" on the S_0 port in question. See Page 22.

– In the PBX, enabled or disabled the terminators on the internal S_0 port in question, depending on the bus variant. See also Page 22.
  - Disabled for a short passive bus in two directions or for a short passive bus with star topology. See Fig. 32 and Fig. 33.
  - Enabled for a short passive bus in one direction, for extended passive bus and for Point-to-Point wiring. See Fig. 30, Fig. 31 and Fig. 34 on page 44.

– Installation cable (for example, J Y (St) Y 2x2x0.6) with the following characteristics:
  - 4-core
  - Unscreened; however: screened for unfavourable conditions, for example, near a strong transmitter or an electrical power line
  - Preferably star quad stranding

– ISDN-wall sockets (for example, IAE or UAE8)

  Note: *If possible, only use wall sockets of one type.*

– Two terminators (100 Ω; load capacity min. 0.25 W) for the any wall socket at the end position

– Distance/line length between the devices as well as the number of wall sockets, depending on the bus variant:
  - Maximum of 150 m and twelve wall sockets for one short passive bus. This bus can be laid in one direction or in two directions from the internal S_0 port. See Fig. 31, Fig. 32 and Fig. 33.

  Note: *Also for a bus with twelve wall sockets, this restriction applies to a max. of eight devices.*

  Note: *Wiring in more than two directions (star configuration) is not permitted.*
  - Maximum of 500 m and four wall sockets for one extended passive bus. For this bus variant, the wall sockets are connected on the last 35 m. The first 465 m remain free. See Fig. 34 on page 44.
  - Maximum 1000 m and one wall socket for Point-to-Point wiring. See Fig. 30.

Fig. 30: Point-to-Point wiring

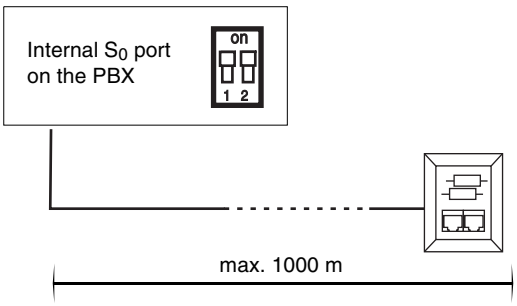

Fig. 31: Short passive bus in one direction

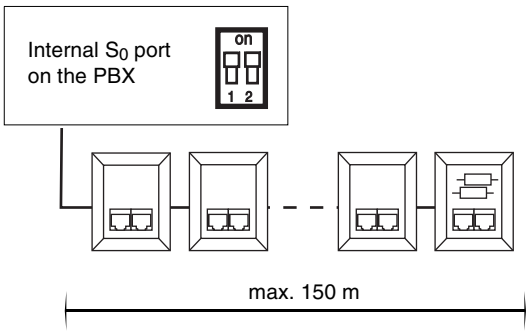

Fig. 32: Short passive bus in two directions

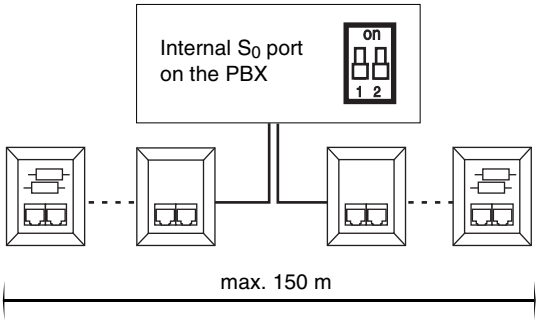

Fig. 33: Short passive bus with star topology

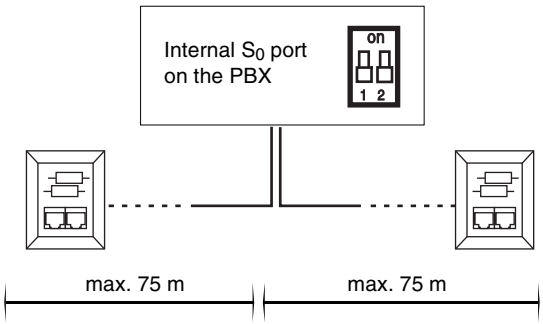

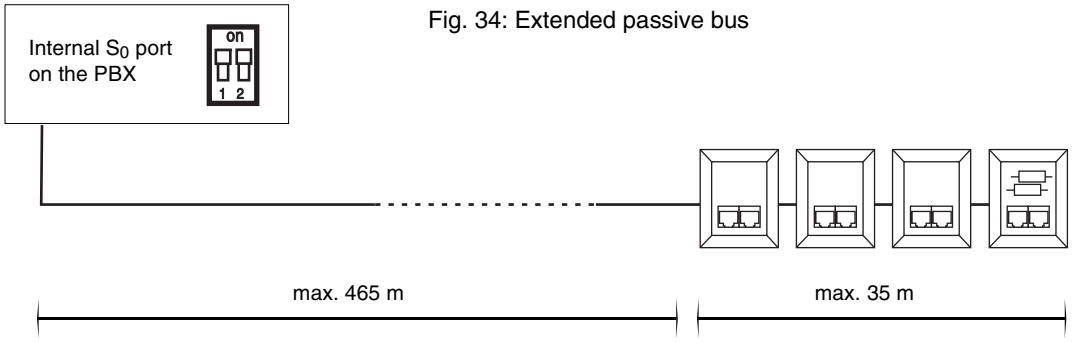

Fig. 34: Extended passive bus

Steps to Take

1. Lay the lines according to the selected bus variant.
2. Attach the wires to the four terminal clamps in the internal S_0 port.

   Note: *When assigning the individual wires, orient yourself with the identifiers subsequently listed or refer to VDE 0815 when identifiers deviate.*

		Cable with two twin wires	Cable with star quad
Physical circuit/ pair 1	a1	Red	Without ring
	b1	black	Single rings, 17 mm spacing
Physical circuit/ pair 2	a2	White	Double rings, 34 mm spacing
	b2	yellow	Double rings, 17 mm spacing

3. Connect the IAE or UAE8 sockets to the terminal clamps on the internal S_0-port. See Fig. 35.
4. Equip the last wall socket with two terminators. See Fig. 35.

   Note: *For a short passive bus in two directions or for a short passive bus with a star topology, equip the wall sockets with terminators at both ends.*

Further Steps

▷ Connect the end devices to the wall sockets.

▷ To finish commissioning, you need to set up an internal phone number for each end device in the configuration manager.

Fig. 35: Wire the wall sockets to the internal S_0 port.

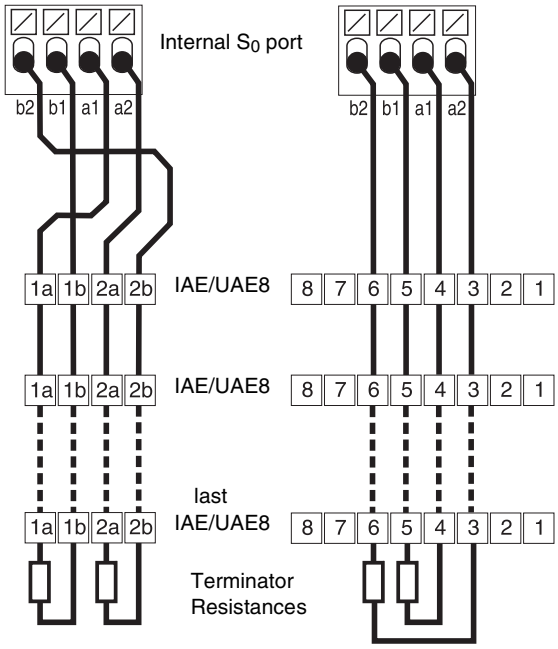

Connecting ISDN End Devices Directly to the Internal U_{P0} Port

Important: *Connecting end devices directly is only possible on COMmander 6000R/RX.*

Requirements

– Minimal distance between the devices Maximum length of the connecting cables to be used: 10 m.

Note: *If the end device is placed a considerable distance away from the PBX, the cable and the wall sockets must be permanently installed. See Page 45.*

– One U_{P0}/S_0 adapter

Note: *To connect a single COMfortel 1100/1500/1600/2500/2500 AB/2600 system telephone, no U_{P0}/S_0 adapter is required. If two COMfortel 1100/1500/2500/2500 AB system telephones should be*

connected to the U_{P0} port, another U_{P0}/S_0 adapter is required.

Steps to Take

1. Single COMfortel 1100/1500/1600/2500/2500 AB/2600: Connect the system telephone to the RJ-45 socket on the internal U_{P0} port.

   Another end device or two COMfortel 1100/1500/1600/2500/2500 AB/2600 units: Insert the U_{P0}/S_0 adapter into the RJ-45 socket on the internal U_{P0} port.

2. Another end device or two COMfortel 1100/1500/1600/2500/2500 AB/2600 units: Connect the end devices to the U_{P0}/S_0 adapter.

Further Steps

▷ To finish commissioning, you need to set up an internal phone number for each end device in the configuration manager.

Installing Cable and the Wall Socket on the Internal U_{P0} Port

Warning: *Power surges, which can occur during electrical storms, can cause life-threatening electric shocks or damage/destroy the PBX.*

→ *Let a qualified electrician lay all the cables inside the building.*

Note: *For a structured cable installation configured on the COMmander 6000R/RX, CAT5 cables and CAT5 wall sockets are used instead of the cables and wall sockets listed here.*

Important: *For structured cable installation on a COMmander 6000R/RX, the line length all of the applicable end devices must be taken into account.*

Requirements

– Installation cable (for example, J Y (St) Y 2x2x0.6) with the following characteristics:
  - One twisted pair per U_{P0} port
  - unscreened; however: screened for unfavourable conditions, for example, near a strong transmitter or an electrical power line

– An ISDN connection socket (for example, IAE or UAE8)

Caution: *Terminators integrated into the wall sockets are destroyed and can therefore cause damage to the device.*

→ *Do not install terminators on one end of a line connected to the U_{P0} port, as opposed to the S_0 port. Terminators are already integrated into the end devices (COMfortel 1100/1500/1600/2500/2500 AB/2600 or U_{P0}/S_0 adapters).*

→ *Remove the terminators already integrated in the wall sockets in order to use the sockets on the U_{P0} port.*

– Distance/line length between the devices depends on the cable used:
  - Maximum 600 m for a screened cable with a pair diameter of 0.6 mm
  - Maximum 1000 m for an unscreened cable with a pair diameter of 0.6 mm

– One U_{P0}/S_0 adapter, depending on the device to be connected

Note: *To connect a single COMfortel 1100/1500/1600/2500/2500 AB/2600 system telephone, no U_{P0}/S_0 adapter is required. If two COMfortel 1100/1500/1600/2500/2500 AB/2600 system telephones should be connected to the U_{P0} port, another U_{P0}/S_0 adapter is required.*

Note: *When using a U_{P0}/S_0 adapter, you do not need to use an ISDN wall socket. The U_{P0}/S_0 adapter can be mounted permanently on the wall and firmly connected with both screw terminals on the back of the PBX. See* Fig. 37 on page 46.

Steps to Take

1. Lay the line.

   Note: *Prevent interference. Avoid laying long lengths of parallel lines, especially next to mains. Twist the pairs.*

2. Attach the wires to the two middle terminal clamps in the internal U_{P0} port. See Fig. 39 on page 46.

3. With an ISDN wall socket: Connect the IAE or UAE8 socket to the terminal clamps on the internal U_{P0} port. See Fig. 39, Fig. 36 and Fig. 38 on page 46.

   Only U_{P0}/S_0 adapters: Connect both screw terminals at the back of the U_{P0}/S_0 adapter to the terminal clamps on the internal U_{P0} port. See Fig. 37 on page 46.

4. With an ISDN wall socket: If necessary, connect the U_{P0}/S_0 adapter.

Further Steps

▷ Connect the end devices to the wall socket or to the connection sockets on the U_{P0}/S_0 adapter.

▷ To finish commissioning, you need to set up an internal phone number for each end device in the configuration manager.

Fig. 36: COMfortel 1100/1500/1600/2500/ 2500 AB/2600 via an ISDN wall socket

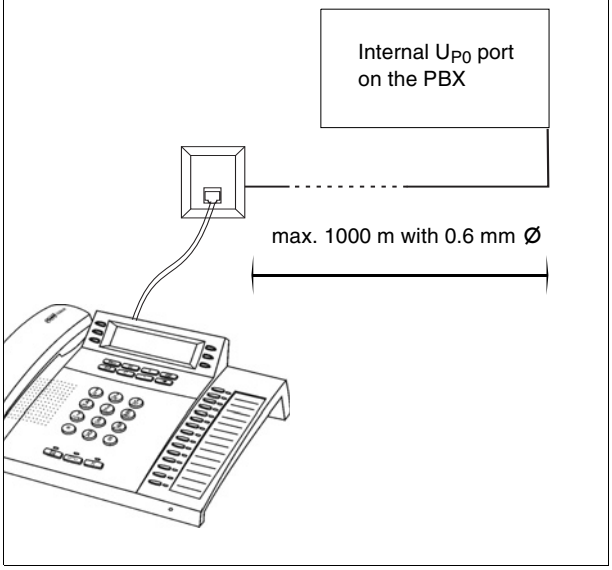

Fig. 37: Connection over a fixed U_{P0}/S_0 adapter

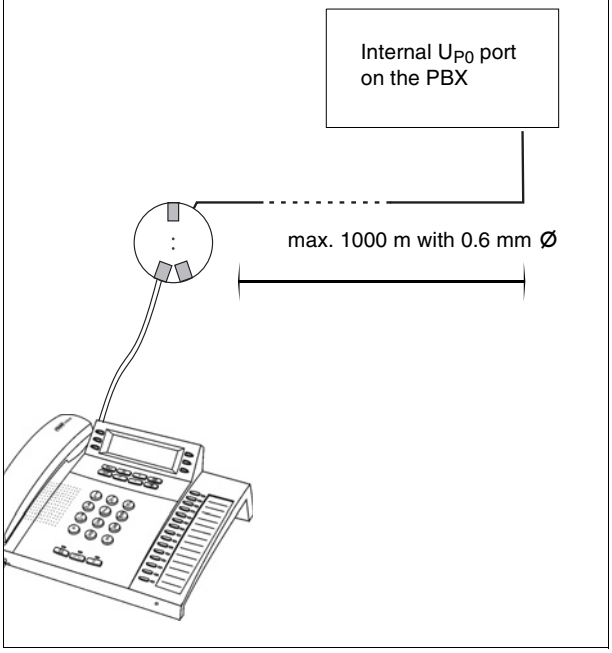

Fig. 38: Connection via a U_{P0}/S_0 adapter and an ISDN wall socket

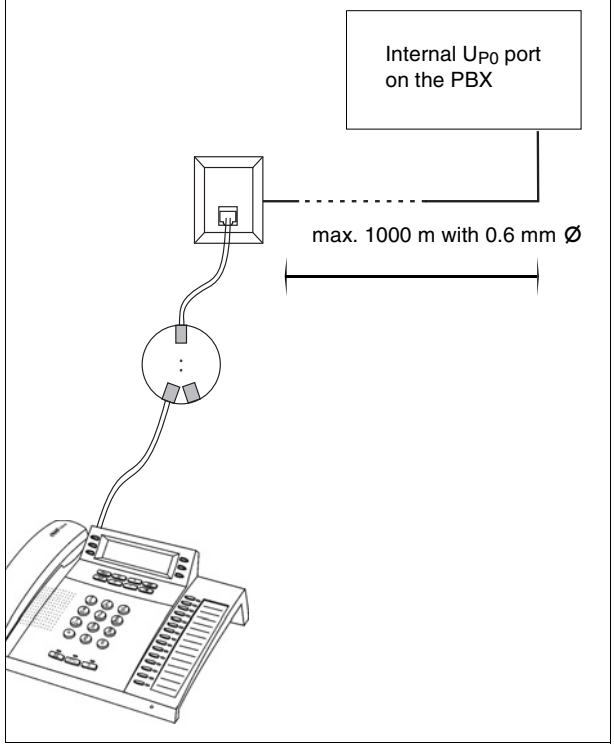

Fig. 39: Connect the wall sockets to the internal U_{P0} port

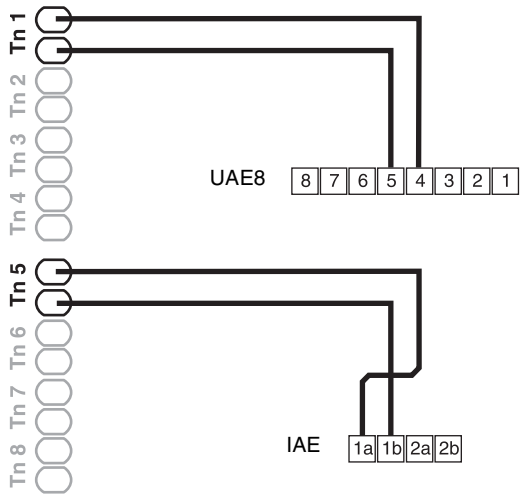

Connecting VoIP End Devices connecting

This section describes how to connect different VoIP end devices to the Ethernet port.

Warning: *Touching voltage-carrying conductors or telephone connections may cause a life-threatening electric shock.*

→ *The PBX contains hazardous voltages, even outside of the power supply unit (for instance ringer voltages). Work on active, contact-hazardous parts is only permitted after creating a voltage-free state.*
Working close to active parts is only permitted if these parts are voltage-free or are protected against direct contact.

→ *COMmander 6000: Pull out the power plug of the PBX before commissioning a qualified electrician to open the casing to install the expansion module or perform switching or connecting services.*

→ *If available, also disconnect the devices from auxiliary power sources (for example, UPS).*

Important: *Improper use may cause, for example, functional restrictions or interference, the destruction of the device or, in a worst case scenario, personal injury.*

→ *Only connect equipment that is compatible with the proper use of the PBX.*

Note: *For the COMmander 6000R/RX, no connections are made directly to the module itself but rather via the connector panel on the front panel. The socket assignments on the front panel are described as of* *Page 34*.

Connecting VoIP End Devices to the Ethernet Port

Important: *If you would like to integrate the PBX into an existing network, please contact the system administrator responsible for this. Making changes to an existing network may cause considerable malfunctions. In addition, please note the PBX factory settings for the Ethernet configuration described on* *Page 50*.

Requirements

– Single switch or existing network (LAN) with the following characteristics:
  - Data transmission rate 100 Mbit/s

  Note: *For VoIP data communication in combination with the transmission of limited amounts of data, a data transmission rate in the LAN of 10 Mbit/s is sufficient under certain circumstances. For VoIP data communication in combination with the transmission of large amounts of data (for example, downloads), we recommend upgrading to a data transmission rate of 100 Mbit/s. For this purpose, replace not only all of the active network components (for example, the switch and router) but also all of the passive network components (for example, cables and wall sockets). For reliable support of 100 Mbit/s, you need cables and wall sockets of at least Category 5 (CAT5).*
  - To use DiffServ to prioritize speech packets: DiffServ support on all active network components available and enabled

  Note: *When using a switch with PoE function, a separate power supply (for example, via a power plug) is not normally required for connected VoIP telephones.*

– Patch cable

Steps to Take

1. Insert the end of the cable into the Ethernet socket on the end device.
2. Insert the other end of the cable into the output socket on the switch or into an existing network outlet.

Further Steps

▷ To finish commissioning, set up an internal phone number for each end device in the configuration manager.

Connecting Other Devices

This section describes how to connect a printer to the COMmander 2TSM (R) module of the PBX for printing out call data.

Warning: *Touching voltage-carrying conductors or telephone connections may cause a life-threatening electric shock.*

→ *The PBX contains hazardous voltages, even outside of the power supply unit (for instance ringer voltages). Work on active, contact-hazardous parts is only permitted after creating a voltage-free state.*
Working close to active parts is only permitted if these parts are voltage-free or are protected against direct contact.

→ *COMmander 6000: Pull out the power plug of the PBX before commissioning a qualified electrician to open the casing to install the expansion module or perform switching or connecting services.*

→ *If available, also disconnect the devices from auxiliary power sources (for example, UPS).*

Important: *Improper use may cause, for example, functional restrictions or interference, the destruction of the device or, in a worst case scenario, personal injury.*

→ *Only connect equipment that is compatible with the proper use of the PBX.*

Note: *For the COMmander 6000R/RX, no connections are made directly to the module itself but rather via the connector panel on the front panel. The socket assignments on the front panel are described as of* *Page 34*.

Connecting the Printer

Requirements

– USB cable

– Printer compatible with PCL4 printer language (HP Laserjet)

Note: *You can use any printer with at least PCL4 emulation and USB port. PCL6 or PCL5c emulation is downward compatible and includes PCL4.*

– Minimal distance between the devices (up to 5 m)

Note: *If the distance between the printer and the PBX is greater than approx 2 m, the cable must be laid permanently.*

Steps to Take

1. Insert one end of the cable into the USB socket on the PBX (see Fig. 10 on page 26 or Fig. 20 on page 32).
2. Insert the other end of the cable into the USB socket on the printer.

Further Steps

▷ Hotel printing function: At the end of commissioning, you need to enable the hotel function and set it up in the configuration manager.

Commissioning

This section describes how to place the PBX into operation. This includes turning on the PBX, setting up the network connection between the computer and the PBX as well as logging into the web interface on the PBX for setting up the initial configuration. After this, you will learn how to put each individual end device into operation.

Turning on the PBX

Warning: *Touching voltage-carrying conductors or telephone connections may cause a life-threatening electric shock.*

→ *Therefore, close the casing before you put the PBX into operation.*

Note: *Establish a connection to a PC for the subsequent configuration before you close the casing. If the Ethernet port on the PBX is not yet connected to the internal network, first establish an Ethernet connection (Page 53) to a separate PC.*

Requirements

– Earthed PBX (see Page 30 and Page 34)

Steps to Take

1. Connect the PBX with a freely accessible 230 V mains socket. For a COMmander 6000R/RX, additionally turn the PBX on using the “Power” switch:

The “Status” LED and the “Power” LED light up in red and orange for several seconds/minutes.

If both LEDs are lit green, the PBX is ready for operation.

Note: *If the “Power” LED remains continuously lit in red, an error has occurred. Please contact your dealer or the manufacturer directly.*
The LEDs are easily visible on the front panel of the COMmander 6000R/RX.
*If you press the **Power** button for 4 to 14 seconds during the boot process, the PBX will be powered down immediately.*

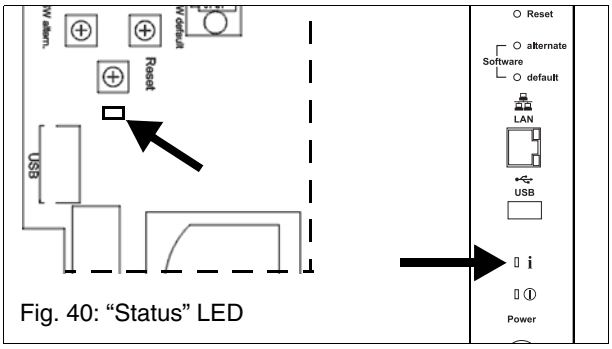

Fig. 40: “Status” LED

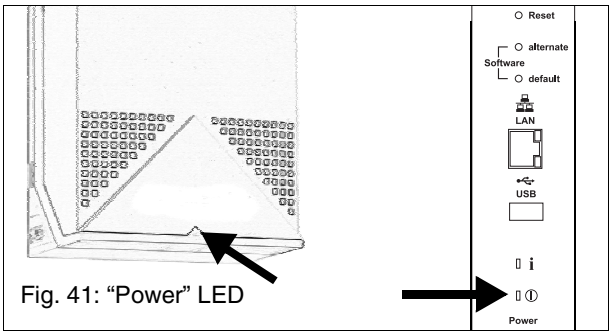

Fig. 41: “Power” LED

Further Steps

▷ Open the Configuration Manager of the PBX (Page 49 or Page 50).

▷ Configure the Basic Settings (Page 51).

▷ Perform system activation (Page 52).

▷ Put the End Devises into Operation (ab Page 54).

Note: *Switching off/shutting down the PBX is described in detail in the Operation and Configuration Instructions.*

Opening Configuration Manager of the PBX via PC with Permanent IP Address from the APIPA Address Range

Requirements

– PC meeting the minimum requirements. See Page 18.

– Computer with active APIPA address (e. g. Apple Macintosh):
  - Active Ethernet connection between PC and PBX
  - Only one Auerswald PBX in the network with enabled **Permanent IP address from the APIPA address range** function

– Computer without APIPA address (e. g. most of the Windows computers):
  - Existing Ethernet connection between the computer and the PBX. See Page 53.
  - IP address of the PC received automatically (see TCP/IP settings of the PC). To this end, no DHCP server may be active in the network.

Steps to Take

1. Start a browser (for example, Mozilla Firefox).
2. Enter the IP address of the PBX in the address field of the browser:
   http://169.254.1.240

   Important: *In the case of some browsers, superfluous zeroes may cause problems. For this reason, you should not enter e.g. 169.254.001.240 instead of 169.254.1.240.*
3. Press the enter key.

   Since the PBX forces an HTTPS connection, your browser will provide a saftey warning (because of the missing safety certificate).
4. If necessary, transmit the safety certificate to your working environment (user and browser profile). See Page 51f.

   Note: *The data will be encrypted even if you do not transmit the safety certificate to your working environment.*

   Since the safety exception rule was saved permanently in the Mozilla Firefox, no more safety warnings will be provided after accessing the PBX.

   After transmitting the safety certificate in the Internet Explorer you will still receive a safety warning.

   The configuration manager of the PBX will open for entering the basic settings.

Further Steps

▷ Configure the Basic Settings (Page 51).

Opening Configuration Manager of the PBX via PC in the Same Network

Requirements

– PC meeting the minimum requirements. See Page 18.

– Active Ethernet connection between PC and PBX

– Computer and PBX on the same network:
  - The PBX is delivered with the following default network settings:

IP address	192. 168. 0. 240
Subnet mask	255. 255. 255. 0
Gateway	0. 0. 0. 0
DHCP client	Disabled

  - If necessary, configuration of a static IP address on the computer, see Page 53.

Important: *Please contact the responsible system administrator and configure the settings according to his instructions.*

Steps to Take

1. Start a browser (for example, Mozilla Firefox).
2. Enter the IP address of the PBX in the address field of the browser:
   http://192. 168. 0. 240

   Important: *In the case of some browsers, superfluous zeroes may cause problems. For this reason, you should not enter e.g. 192.168.000.240 instead of 192.168.0.240.*
3. Press the enter key.

   Since the PBX forces an HTTPS connection, your browser will provide a saftey warning (because of the missing safety certificate).
4. If necessary, transmit the safety certificate to your working environment (user and browser profile). See Page 51f.

   Note: *The data will be encrypted even if you do not transmit the safety certificate to your working environment.*

   Since the safety exception rule was saved permanently in the Mozilla Firefox, for example, no more safety warnings will be provided after accessing the PBX.

   After transmitting the safety certificate in the Internet Explorer you will still receive a safety warning.

   The configuration manager of the PBX will open for entering the basic settings.

Further Steps

▷ Configure the Basic Settings (Page 51).

Transmitting the safety certificate alert for Internet Explorer 8.0

Requirements

- PC meeting the minimum requirements. See Page 18.
- Active Ethernet connection between PC and PBX.
- Knowledge of the admin user password and admin password of your PBX.

Steps to take

1. Start Internet Explorer 8.0.
2. Enter the IP address of the PBX in the address field of the browser.
3. Press the enter key.

   Your browser will provide a saftey warning.
4. Click on **Continue to this website (not recommended)**.

   The login dialog opens.
5. Enter the admin user password and admin password.

   The configuration manager of the PBX will open.

   Note: *After installing the safety certificate in the Internet Explorer you will still receive a safety warning.*

Transmitting the safety certificate alert for Mozilla Firefox 4.0

Requirements

- PC meeting the minimum requirements. See Page 18.
- Active Ethernet connection between PC and PBX.
- Knowledge of the admin user password and admin password of your PBX.

Steps to take

1. Start Mozilla Firefox 4.0.
2. Enter the IP address of the PBX in the address field of the browser.
3. Press the enter key.

   Your browser will provide a saftey warning.
4. Click on **I Understand the Risks**.
5. In the next window, click on **Add exception...**.
6. In the next window, select the **Permanently store this exception** check box.
7. Click on **Confirm Security Exception**.

   The login dialog opens.
8. Enter the admin user password and admin password.

   The configuration manager of the PBX will open.

   Note: *▷Since the safety exception rule was saved permanently in the Mozilla Firefox, for example, no more safety warnings will be provided after accessing the PBX.*

Configuring Basic Settings

Requirements

- For entering the basic settings: opened configuration manager

Steps to Take

1. Enter at least the Admin PIN (with repeat entry) and Admin password (with repeat entry). The following entries are possible:

   Admin PIN: Exactly 6 digits
   Digits

   Admin password: 8-32 digits
   Digits
   Characters: **a**-**z**, **A**-**Z**,
   No umlauts and ß

   Note: *A coloured line under the **Admin password** entry field shows the safety degree of the password.*

   An extended set of characters applies to passwords generated with firmware up to version 5.0B. If the old password has not been changed, you can continue to use it.
2. If required, change the **Admin user name** (recommended). The following entries are possible:

   Admin user name: Up to 6 digits
   Digits and characters

3. Click **Saving**.

   The login dialog opens.

4. In the corresponding entry fields, enter the **Admin user name** and the **Admin password** and click **OK**.

   The page **Administration > IP configuration** opens.

5. Configure under **Ethernet configuration** the settings you want.

   Important: *Check the settings and write them down. If wrong settings are saved, access to the PBX might not be possible anymore.*

   Note: *If network integration is performed by a new Ethernet configuration, we recommend to disable the* ***Permanent IP address from the APIPA address range****.*

6. Click **Saving**.

   A dialog for applying the setting opens.

7. Click **Apply immediately**.

   The IP address is immediately applied and the PBX is routed to the new IP address. After the re-routing, you need to log in again.

   Note: *Additional information concerning individual settings can be found in the online help.*

Further Steps

▷ Perform system activation.

▷ Perform further settings in the configuration manager.

Note: *For this purpose, refer to the Configuration Manual starting on Page 56 and to the help functions of the configuration manager.*

System Activation

Requirements

– Configuration manager, opened with sufficient authorization

Steps to Take

1. Open the page **Administration > Dongle releases.**
2. Click **Open Upgrade Center**.

   The Upgrade Center opens in a separate window. The serial number of the PBX is automatically entered and set in the **Other: Device-S/N.:** entry field. An overview of the products available for your PBX are displayed.

3. Enter the data for your user account in the **User name** and **Password** entry fields under **Your Account.**
4. Click **Log in**.
5. Under **Category**, click **Internal Subscriber**.

   The items available are displayed.

6. For the **System activation (91950)** article, click the shopping basket icon in the **Order** column.
7. Under **Shopping basket,** click **Shopping basket**.

   The selected item is displayed in the shopping basket.

8. Select the payment type.
9. When you are finished making changes, click:

   Proceed to the TOB: Before the initial order and after every change in the General Terms and Conditions (TOB), the terms and conditions of business of Auerswald GmbH & Co. KG must be accepted.

   Proceed to the payment: If TOBs have already been confirmed.

10. Follow the additional instructions.

    Note: *You will receive the order confirmation and the 20-digit release codes required for release after purchase.*

11. Transmit the release codes into your PBX:

    Payment types **Credit card**, **Direct debit** or **Invoice**: The order confirmation (with release codes) is displayed in the Upgrade Center at the end of the process.

    a) Click **Apply all release codes in the PBX with IP XXX.XXX.XXX.XXX.**

    The releases are automatically applied in the PBX. The new release status is displayed under **Administration > Dongle releases > Released**.

    Payment type **Cash on delivery**: The order confirmation (with release codes) is sent to you via UPS.

    a) Open the page **Administration > Dongle releases**.

    a) In the **Enter release code** entry field, enter one of your newly acquired release codes.

    a) Click **Saving**.

    The new release status is displayed under **Administration > Dongle releases > Released**.

Connecting the PC to the Ethernet Port

Warning: *Touching voltage-carrying conductors or telephone connections may cause a life-threatening electric shock.*

→ *The PBX contains hazardous voltages, even outside of the power supply unit (for instance ringer voltages). Work on active, contact-hazardous parts is only permitted after creating a voltage-free state.*
Working close to active parts is only permitted if these parts are voltage-free or are protected against direct contact.

→ *COMmander 6000: Pull out the power plug of the PBX before commissioning a qualified electrician to open the casing to install the expansion module or perform switching or connecting services.*

Note: *For the COMmander 6000R/RX, no connections are made directly to the base circuit board itself but rather to the front panel of the CPU.*

Requirements

– Minimal distance between the devices

– The Ethernet connection cable contained in the package

Steps to Take

1. Insert one end of the cable into the network socket on the computer.
2. Insert the other end of the cable into the Ethernet socket on the PBX.

   Note: *If the Ethernet port is required for the Internet connection, you need to connect the PC to the router. For more information, contact your system administrator. See* *Page 39*.

Configuring the Static IP Address in the PC

Steps to Take

Note: *The following steps describe how to set the configuration on the operating systems, Windows XP, Vista and 7. If using another operating system or one with significant differences to the basic settings, refer to the documentation of your operating system.*

1. Click **Start**.
2. Click **Control Panel**.
3. Windows XP: Double-click **Network Connections**.

   Windows Vista: Double-click **Network and Sharing Center**, and then click **Manage network connections**.

   Windows 7: Click **Network and Internet** and then click **Network and Sharing Center**.
4. Windows XP/Vista: Right-click the network connection to be configured.

   Windows 7: Double-click **LAN-Verbindung**.
5. Click **Properties**.
6. Windows XP/Vista: Click **Internet Protocol (TCP/IP)**.

   Windows 7: Double-click **Internet Protocol Version 4 (TCP/IPv4)**.
7. Click **Properties**.
8. Click **Use the following IP address**.
9. Enter the IP address. If the Ethernet configuration on the PBX delivered from the factory has not been changed, the following IP addresses are available:
   - 192. 168. 0. 1 to 192. 168. 0. 254, except for 192. 168. 0. 240 (IP address of the PBX)

   Note: *No DNS settings are necessary.*
10. Click **OK**.

    Note: *You may have to restart the computer.*

Changing the Ethernet Configuration on the PBX

Requirements

– An internal telephone with tone dialling

– Existing authorisation “Controlling the PBX via telephone”

Steps to Take

1. Pick up the telephone receiver.
2. Enter one of the number sequences:

## 8 * 93 0 * 1 #	Switches DHCP on.
## 8 * 93 0 * 0 #	Switches DHCP off.
## 8 * 93 1 * Address #	Changes the IP address.
## 8 * 93 2 * Address #	Changes the subnet mask.
## 8 * 93 3 * Address #	Changes the gateway address.

Note: *Always enter the address with 12 digits. For example, for the IP address 192.168. 21. 2, enter 192 168 021 002.*

Note: *If the PBX is no longer configured with its factory settings, you need to enter the PBX admin PIN between the 8 and *.*

You will then hear the confirmation tone (pulsating tone).

3. Hang up the receiver.

Querying the Ethernet configuration on the PBX

Requirements

– An internal telephone with tone dialling and CLIP capability, in order to display CLIP information sent from the PBX

– Existing authorisation “Controlling the PBX via telephone”

Steps to Take

1. Pick up the telephone receiver.
2. Enter one of the number sequences:

## 8 * 94 0 #	Query the DHCP client status.
## 8 * 94 1 #	Query the IP address.
## 8 * 94 2 #	Query the subnet mask.
## 8 * 94 3 #	Query the gateway address.

You will then hear the confirmation tone (pulsating tone).

3. Hang up the receiver.

The telephone rings.

The setting is shown on the display.

4. Pick up the receiver and then hang it back up again in order to end the call and display.

Putting Analogue End Devices into Operation

Requirements

– The internal phone number configured on the a/b port in question

– Earthed PBX (see Page 30 and Page 34)

Steps to Take

1. Connect end devices with a separate power supply to the 230 V mains.

The end device is ready for operation.

Putting ISDN System Telephones into Operation

Requirements

– The internal phone number configured on the S_0 port in question

– Earthed PBX (see Page 30 and Page 34)

– Firmware version 4.4E oder higher for the telephone

Steps to Take

1. Connect end devices with a separate power supply to the 230 V mains.
2. Select the language.
3. Enter the internal phone number as an MSN for the end device.

The end device is ready for operation.

Putting Standard ISDN End Devices into Operation

Requirements

– The internal phone number configured on the S_0 port in question

– Earthed PBX (see Page 30 and Page 34)

Steps to Take

1. Connect end devices with a separate power supply to the 230 V mains.
2. Enter the internal phone number as an MSN for the end device.

   The end device is ready for operation.

Putting VoIP System Telephones into Operation

Note: The following description refers to the COMfortel VoIP 2500 AB. To put a COMfortel 3500 or a COMfortel DECT IP1040 Base into operation, please refer to the commissiong instructions of the relevant end device.

Requirements

– The internal phone number configured for VoIP

– The user password configured for the internal phone number

– Earthed PBX (see Page 30 and Page 34)

– Firmware version 4.4E oder higher for the telephone

Steps to Take

1. Connect end devices with a separate power supply to the 230 V mains.
2. Select the language.
3. Enter the internal phone number as an MSN for the end device.
4. Enter the user password for the end device.

   The end device logs into the PBX.

Note: *The prerequisite for the execution described here is that the telephone be as a DHCP client in the network. If this is not the case, refer to the Commissioning Instructions for the telephone.*

Important: *Once you have used the PBX configuration manager to configure the SIPS function for encrypting internal VoIP calls, this function is automatically enabled on VoIP system telephones (this function will be available at a future point in time via an update). At the end of configuring the function, the PBX sends the required trusted root certificate to every VoIP system telephone. In response, the system telephones expect a "fingerprint" consisting of a series of numbers which is used to verify and confirm the trusted root certificate. Note the "fingerprint" in the configuration manager after setup and enter this in the menu of the system telephone. If the telephone was not in operation at the time the certificate was transmitted, you must enter the fingerprint directly after entering the internal phone number. As long as the system telephone is waiting for the fingerprint to be entered, no calls can be made on the system telephone in question.*

Putting Standard VoIP End Devices into Operation

Requirements

– The internal phone number configured for VoIP

– Recommended: The user PIN configured for the internal phone number

– Earthed PBX (see Page 30 and Page 34)

Steps to Take

1. Connect end devices with a separate power supply to the 230 V mains.
2. When configuring the end device, create a provider named "PBX" and then enter the PBX IP address as the registrar and domain.
3. When configuring the end device, create an account for the provider "PBX" and enter the internal phone number for the user name and the associated user PIN as the password.

   The end device logs into the PBX.

Note: *Once you have used the PBX configuration manager to configure the SIPS function for encrypting internal VoIP calls, you can also this function on standard VoIP end devices that support SIPS (this function will be available at a future point in time via an update). For this purpose you need to read out the trusted root certificate from the PBX and then save it in the phone. For more information on this please prefer to the instructions for the telephone.*

Configuration Manual

This section describes the procedure for the basic configuration of the COMmander 6000 series step by step using examples (see also Opening Configuration Manager of the PBX via PC in the Same Network on page 50).

Example 1: Basic Configuration with Int. Subscribers and Call Distribution

Note: *Note that this section thoroughly describes only the most important settings.*

The combination of the modules and devices listed here is an example only and may vary greatly from your PBX.

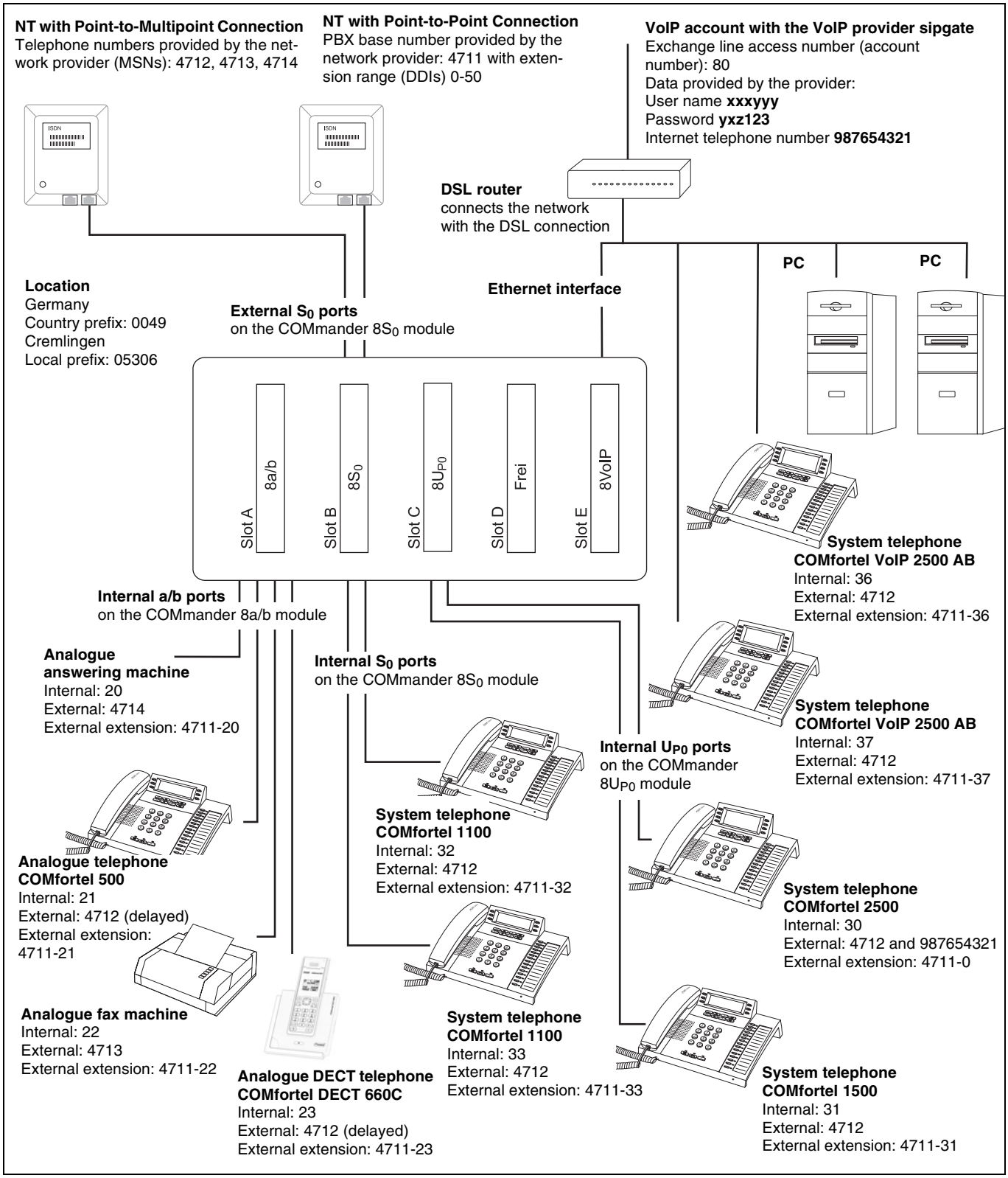

Logging into the Configuration Manager

Requirements

– Correct connection between the PBX and your PC. See page 53 and the following.

Steps to take

1. Start the configuration manager.
2. Enter the **Admin user name** and the **Admin password** in the corresponding entry fields.
3. Click **OK**.

The configuration manager opens. You see a menu with a tree structure on the left side of the page. You now have access to the entire system configuration. The structure is similar to the directory structure on a hard drive where each folder can be described with a unique path.

Additionally the configuration manager provides a horizontal information bar at the top. It contains Overviews, Log files and Monitoring as well as the Login button and a search function.

Hardware Configuration

Assign the existing modules to the corresponding expansion slots.

Requirements

– Configuration manager, opened with sufficient authorization

Steps to take

1. Open the page **Hardware > Selection of modules**.

   The Slot column lists each module slot (Slot A to E and, if necessary, Slot F to O).

2. In the **Usage** list field, select the module that has been inserted in the associated module slot. For available module slots, select **not defined**.

   Note: *Note that parameters set here correspond to the real hardware settings on your PBX. If this is the case, the settings are marked in black. If this is not the case, the settings are marked in red.*

IP Configuration

Configure the IP configuration for the PBX (CPU), the VoIP (R) and the VMF (R) module.

Important *Contact the responsible system administrator and configure the settings according to his instructions.*

CPU

Requirements

– Configuration manager, opened with sufficient authorization

Steps to take

1. Open the page **Administration > IP configuration.**
2. Under **Ethernet configuration** of the CPU, change the settings made during commissioning for the connection to a PC or to the network, if necessary.

Further steps

▷ Save your settings before you leave the page.

VMF/VoIP Module

Requirements

– Configuration manager, opened with sufficient authorization

Steps to take

1. Open the page **Administration > IP configuration.**
2. If you would like to allocate a permanent IP address to the module, clear the check box for the module (e. g. **8VoIP module - Slot E**).
3. Under IP address enter the desired **IP address** for the corresponding module.
4. If necessary, change the entered subnet mask for the corresponding module under **Subnet mask**.
5. If necessary, change the entered gateway for the corresponding module under **Gateway**.

Further steps

▷ Save your settings before you leave the page.

Port Configuration

Port configuration is the basic set-up for the inserted modules as well as for the CPU. The connection assignments for the ports must be set depending on the proper use and adapted to the actual connection options on site.

Note: *For a COMmander 8a/b (R) module, COMmander 8VoIP (R) module, COMmander 16VoIP (R) module or COMmander VMF (R) module, no port configuration is necessary.*

Internal and external S_0 ports

Configure the internal and external S_0 ports on the COMmander $4S_0/8S_0$ or COMmander $4S_0/8S_0$ R module.

Note*Note that parameters set here correspond to the actual port configuration on your PBX (which port is set to internal or external). If this is the case, the settings are marked in black. If this is not the case, the settings are marked in red.*

The port configuration on the COMmander $4S_0$ (R) module is the same as the configuration described here.

Requirements

- Configuration manager, opened with sufficient authorization
- Inserted COMmander $4S_0/8S_0$ (R) module

Steps to take

1. Open the page **Hardware > Port configuration**.
2. Under **Usage**, configure the S_0 ports for the corresponding module (e. g. **8S0 module - Slot E**) as an internal or external port as you wish. (Unused ports are set to available.)
3. On the external S_0 ports under **Kind of connection**, configure the connection type of the NTs you have requested from your network provider. (When using internal ports, the connection type is automatically set to a PTMP connection.)
4. On the external S_0 ports under **Additional functions**, activate, if necessary, **S0 bus monitoring** in order to prevent waiting times on the external dial tone (recommended).

Further steps

▷ Save your settings before you leave the page.

Internal U_{P0} ports

Configure the internal U_{P0} port on the COMmander $8U_{P0}$ (R) module.

Requirements

- Configuration manager, opened with sufficient authorization
- Inserted COMmander $8U_{P0}$ (R) module

Steps to take

1. Open the page **Hardware > Portkonfiguration**.
2. Under **Usage**, configure the U_{P0} ports for the corresponding module (e. g. **8UP0 module - Slot E**) as an internal port as you wish. (Unused ports are set to available.)

   Note*For U_{P0} ports, the kind of connection is automatically configured as PTMP connection.*

Further steps

▷ Save your settings before you leave the page.

VoIP channels

Requirements

- Configuration manager, opened with sufficient authorization

Steps to take

1. Open the page **Administration > VoIP configuration**.
2. In the **External VoIP channels** list field under **Distribution of the VoIP channels**, select the desired number. Take into account the capacity of your Internet connection.

   Note: *The PBX has two VoIP channels by default. When using a VoIP module, the two VoIP channels included by default are switched off! The number of VoIP channels available when using VoIP modules consists of the number of channels on the VoIP modules together with the additional channels enabled on the PBX dongle via the Upgrade Center.*

   The number of internal VoIP channels available for internal telephony is automatically calculated from the number of available VoIP channels minus the VoIP channels reserved for external calls.

Further steps

▷ Save your settings before you leave the page.

Internal Telephone Numbers

In order for the connected terminal devices to be available, the internal ports must be configured with internal telephone numbers. In addition, this also applies to VoIP subscribers connected to the Ethernet port and to handsets logged to a COMfortel DECT IP1040 Base. This means that each terminal device connected receives a subscriber telephone number.

It is a good idea to create a telephone numbering plan for the devices (see also Example 1 on page 56) and then use the following steps to transmit this to the PBX.

Note: *On a Point-to-Point connection, the configuration of a linear call distribution is usual (e. g., a call to 4711-21 is distributed to the internal subscriber telephone number 21). This includes needing to assign internal telephone numbers that lie in the extension number range (DDIs) assigned by the network provider. Call distribution can then be done automatically (for more information on this, see* *Configuring call distribution on page 65**).*

If multiple internal devices need to be accessible via an external telephone number, a common internal group for the internal subscribers must first be configured.

The PBX lets you assign internal telephone numbers 10-9999. Of this number range 10-9999, the following telephone numbers are assigned:
- Exchange line access number (account numbers) for VoIP
- Internal subscriber telephone numbers
- Internal group telephone numbers
- Internal telephone numbers for fax boxes
- Internal telephone numbers for voice mailboxes
- Internal CAPI dial-in numbers

- Internal telephone numbers for automatic reception
- Internal basis telephone numbers for open callbacks
- Internal telephone numbers for door terminals
- Internal telephone numbers for audio outputs
- Short-code numbers
- Emergency numbers

Double assigning a number is not possible!
On the page ***Overviews > Telephone numbering plan****, you can get an overview of the internal telephone numbers already assigned at any time.*

The telephone numbers can consist of two to four digits. Using telephone numbers with few digits (two or three-digit numbers) inevitably restricts the possible supply of telephone numbers with more digits. For example, if the telephone number 12 is assigned, the telephone numbers 120-129 and 1200-1299 are no longer available.

For some functions, only telephone numbers with a maximum of 3-digits can be assigned because the last digit is need for the function (e. g., door terminal numbers, telephone numbers for open callbacks).

Internal subscribers

Assign internal telephone numbers from your telephone number plan to the internal ports (a/b, S_0, U_{P0}), the VoIP telephones and to handsets logged into a COMfortel DECT IP1040 Base.

Requirements

- Configuration manager, opened with sufficient authorization
- System activation (see page 52)
- VoIP subscribers and handsets logged into a COMfortel DECT IP1040 Base: internal VoIP channel (see VoIP channels on page 58)
- ISDN subscriber: internal S_0/U_{P0} port (see Port Configuration on page 58)
- Analogue subscriber: inserted COMmander 8a/b (R) module (see Hardware Configuration on page 57)

Steps to take

1. Open the page **Subscriber (scr.) > Telephone numbers.**
2. Click **New**.
3. In the **From:** entry field under **Telephone number**, enter a telephone number for the subscriber.
4. In the **Name** entry field, enter a suitable name with a maximum of 16 characters.
5. In the **Module** list field, select the corresponding module.
6. a/b, S_0, U_{P0} ports: In the **Port** list field, select the port connected to the end device.
7. In the **Device type** list field**,** select a suitable type for your end device.
8. Click **Saving**.

   For the subscriber a user PIN (**PIN**) and a user password (**Password**) are generated automatically.
9. Repeat step 2 to 8 for all additional telephone numbers.

   Note: *The usage of VoIP telephones on the PBX is only possible after a successful login. For logging in the PBX, the configured user password and the user name are used for authentication. As user name, the internal telephone number (****Telephone number****) is used.*

   You can change the user PINs and passwords configured automatically:
   Contrary to passwords, all PINs in the PBX are unique. I. e., it is not possible to configure the same PIN twice.
   - ***PIN****:* *Exactly 6 digits*
     Digits

- ***Password***:*8-32 digits*
  Digits
  Characters: ***a-z***, ***A-Z***,
  No umlauts and ß

→ *Do not use dates of birth or dates as PINs.*

→ *PINs which are easy to guess, such as 111111 or 123456, should also be avoided.*

→ *Password: Avoid existing words (also words written in revers, words with added digits and/or special characters, words containing letters replaced by similar digits or vice versa).*

→ *Password: Alternate capital letters and lower case.*

A coloured bar under the ***Password*** *entry field shows the safety degree of the password.*

An extended set of characters applies to passwords generated with firmware up to version 5.0B. If the old password has not been changed, you can continue to use it.

Important:*The extended set of characters does not apply to VoIP subscribers to be connected to a COMfortel DECT IP1040 Base via a DECT handset, i.e. only letters and numbers - no special characters - may be used in the password. Otherwise, it will not be possible later to log a DECT handset into the COMfortel DECT IP1040 Base.*
In this case, you must change the password generated by a firmware version up to version 5.0B accordingly by hand.

Further steps

▷ Save your settings before you leave the page.

▷ ISDN device or system telephone: Enter the internal telephone number as (first) MSN.

▷ ISDN device: Make sure that the telephone number is transmitted to the PBX.

▷ VoIP system telephone: Enter the internal telephone number as MSN and the user password as regristr. PIN.

▷ Standard VoIP telephone or soft phone: Create a provider **PBX** and enter the IP address of the PBX as registrar and domain. Create an account for the provider **PBX** and enter internal telephone number as user name and the corresponding user password as password. For some standard VoIP telephones or soft phones, you may have to enter IP address of the PBX as proxy.

Note: *If you have contiguous telephone number ranges, you can enter the beginning and end values under* ***from: until:****. Only after saving, the* ***Name****,* ***Module****,* ***Device type*** *and, if necessary,* ***Port*** *will be available for entries.*

You can connect one telephone to an a/b port.

It is a good idea to not connect more than two devices on each S_0 port in order to allow separate calling on either of the two B channels.

One system telephone, COMfortel 1100/1500/2500/2500 AB, can be connected to each U_{P0} port. When using standard ISDN telephones, a U_{P0}/S_0 adapter is required (see *Connecting ISDN End Devices Directly to the Internal U_{P0} Port on page 44**).*

You can delete subscribers you do not need anymore:

→ *Highlight the subscribers in question.*

Note: *A subscriber is highlighted by clicking the corresponding line.*

By additional clicks and pressing the shift and control key, you can highlight several subscribers.

→ *Click* **Delete**.

→ *Click* ***Yes***.

Internal groups

Create the internal groups required.

Requirements

– Configuration manager, opened with sufficient authorization

Steps to take

1. Open the page **Groups > Telephone numbers**.
2. Click **New**.
3. In the **from:** entry field under **Telephone number**, enter a telephone number for the group.
4. In the **Name** entry field, enter a suitable name with a maximum of 16 characters.
5. Click **Saving**.
6. Repeat step 2 to 5 for all additional groups.

Note: *If you have contiguous telephone number ranges, you can enter the beginning and end values under* ***from****:* ***until****:. After the saving, you can enter or change the* ***Name****.*

You can delete groups you do not need anymore:

→ *Highlight the group in question.*

Note: *A group is highlighted by clicking the corresponding line.*

By additional clicks and pressing the shift and control key, you can highlight several groups.

→ *Click* **Delete**.

→ *Click* ***Yes***.

Group members (with ringer delay)

Assign members to the available groups.

Requirements

- Configuration manager, opened with sufficient authorization
- Created internal groups
- Created internal subscribers

Steps to take

1. Open the page **Groups > Group members**.
2. In the list field at the top, select the group in question.
3. Click **New**.
4. In the **from: until:** list field in the **Telephone number / Name** column, select all subscribers and groups to be assigned to the group as members.
5. Click **Saving**.

   The list of group members is displayed.
6. Select the **Ringing delay** check box for all group members that should get a delayed call when the group is called.
7. Click **Saving**.
8. Repeat step 2 to 7 for all additional groups.

Further steps

▷ If necessary, change the time for the ringing delay or select another ringing sequence, e. g. with priority sequence (**Priority**), (see **Groups > Properties > Reachability**).

Note: *When a group is created, the existing settings under* ***Status of inbound/outbound calls*** *do not need to be changed for the call distribution to be correct.*

You can delete the assignment for subscribers and groups that should no longer be called when the group is called:

→ *Highlight the group member in question.*

Note: *A group member is highlighted by clicking the corresponding line.*

By additional clicks and pressing the shift and control key, you can highlight several group members.

→ *Click* ***Delete****.*

→ *Click* ***Yes****.*

External Telephone Numbers

The telephone numbers on the ISDN connection provided by your network provider must be entered in the PBX. In addition, the data for the VoIP accounts used and the associated VoIP provider must be entered.

For each external connection, a separate telephone number must be assigned (in Example 1 on page 56, this is an ISDN Point-to-Point connection, an ISDN Point-to-Multipoint connection as well as a VoIP account with the provider ...).

Collect the telephone numbers/data provided by your network provider/VoIP provider for the following settings.

Location

In the PBX, configure the location where it should be operated.

Requirements

- Configuration manager, opened with sufficient authorization

Steps to take

1. Open the page **Public switched tel. networks > Basic settings**.
2. In the **Country code** entry field under **Area codes/ exchange line access number**, enter the country prefix for the location of the installation.
3. In the **Local area code** entry field under **Area codes/ exchange line access number**, enter the local prefix for the location of the installation.

Further steps

▷ Save your settings before you leave the page.

ISDN Point-to-Multipoint Connection

In the PBX, configure each existing ISDN Point-to-Multipoint connection with the telephone numbers provided by the network provider.

Requirements

– Configuration manager, opened with sufficient authorization

– External S_0 port in connection type Point-to-Multipoint connection (see Hardware Configuration on page 57 and Internal and external S0 ports on page 58).

Steps to take

1. Open the page **Public switched tel. networks > ISDN connections > PTMP connection.**
2. In the list field at the top under **PTMP connection**, select the external S_0 port.
3. In the **Name of the PTMP connection** entry field, enter a name with a maximum of 16 characters.
4. Click **New**.
5. In the **from** entry field under **Multiple subscriber number (MSN)**, enter your first available MSN.
6. In the **Name** entry field, enter a suitable name with a maximum of 16 characters.
7. In the **Ringer rhythm** list field, select the desired ringer rhythm for external calls via this telephone number.
8. Click **Saving**.
9. Repeat step 4 to 8 for all additional MSNs.

   Note: *A change under **GSM** and **LCR** is only necessary in exceptional cases (for example, when operating a GSM gateway).*

   *Under **Charge information**, a change is only necessary if problems are caused by call charges.*

   *Under **CLIP no screening** and **Telephone numbers for CLIP no screening** a change is only necessary if you would like to transfer special telephone numbers.*

ISDN Point-to-Point Connection

In the PBX, configure each existing ISDN Point-to-Point connection with the telephone numbers provided by the network provider.

Requirements

– Configuration manager, opened with sufficient authorization

– External S_0 port in connection type Point-to-Point connection (see Hardware Configuration on page 57 and Internal and external S0 ports on page 58).

Steps to take

1. Open the page **Public switched tel. networks > ISDN connections > PBX base numbers/trunk bundles**.
2. Click **New**.
3. In the **PBX base number** entry field, enter the PBX base number (without extension).
4. In the **Name** entry field, enter a name with a maximum of 16 characters.
5. In the **from** entry field under **DDI number block (DDIs)**, enter the extension range with the lowest DDI.

   Note: *Make sure to follow the instructions provided by your network provider for entering the DDI number block exactly. If you want to enter a one or two-digit DDI range, your network provider must provide you with one and two-digit DDIs. The same applies to a two and three-digit DDI range.*

   You can also enter the zero with the exact number of digits of the DDIs (e.g. DDI number block 00-99). Next, you need to assign an internal call destination to each of these multi-digit DDIs (e.g. 00 and 01) in the call distribution. Then the PBX will only react when the number of digits has been reached, i.e. when the caller has dialled 00 or 01, for example, as DDI. If the caller only dials 0, however, the fallback function will react as soon as the delay for dialling of the next digit has expired.
6. In the **until** entry field under **DDI number block (DDIs)**, enter the extension range with the highest DDI.
7. Click **Saving**.
8. Under **Slot .../Port ...**, select the desired port.

   Note: *If the same PBX base number has been provided by the network provider for several PTP connections, these connections can be connected.*
   A bundled PTP connection consists of all marked ports of the same line and has the same telephone number and the same number block.
9. Repeat step 2 to 8 for all additional PBX base numbers.

Further steps

▷ Save your settings before you leave the page.

▷ Click **Configure**, to configure further settings for the ISDN PTP connection.

→ A change under **GSM** and **LCR** is only necessary in exceptional cases (for example, when operating a GSM gateway).

→ By enabling **CCBS** and/or **CCNR** a callback on busy (CCBS) or on no reply (CCNR) can be offered to external callers if the service feature has been released by the network operator.

→ You can disable the transfer of **Charge information** if it causes problems on an external connection.

→ Under **CLIP no screening** a change is only necessary if you would like to transfer special telephone numbers.
If you enable CLIP no screening, you have to enter the **Telephone number for CLIP no screening** on the page **Public switched tel. networks > ISDN connections > Direct dialling numbers for PTP connection**.

→ Under **Call forwarding via**, **For call forwarding via the unit, use any available call channel**, **Delay time for call forwarding on no reply in the PBX** and **Routing via exception telephone numbers** a change is only necessary for a configuration of call forwarding for your own external telephone numbers.

▷ If necessary, enter the DDIs (**Public switched tel. networks > ISDN connections > Direct dialling numbers for PTP connection**) which differ from the linear call distribution (**Public switched tel. networks > Call distribution > Linear call distribution**).

Note: *For similar internal telephone numbers and external extension numbers, in linear call distribution a 1:1-assignment is made automatically for the DDIs from the DDI number block (DDIs).*

Voice over IP (VoIP)

The PBX supports two different kinds of VoIP accounts:

- VoIP accounts with one or more VoIP phone numbers (similar the Point-to-Multipoint connection on ISDN)
- VoIP accounts with a DDI number block (similar to the PBX connection on ISDN) based on the SIP-DDI feature (also known as SIP trunking)

To receive the necessary access data, accounts must first be set up with one or more VoIP providers. For this purpose, you need to register your name and address with a provider via their web site. Then a telephone number accessible from the land line network and the Internet as well as an account with a user name (is also known as the user name, authorization user and SIP ID) and password are assigned. Most of the time, the registered connection is set up within just a few minutes and can be used almost immediately.

Note: *In order to resolve the names of Internet addresses, the PBX needs (just like with a PC connected to the Internet) the address for a DNS server. This means that the address provided by your system administrator or by your Internet service provider needs to be entered. You may also enter a second address just in case the main DNS server is unavailable. If you have not configured this setting during the initial system set-up, you can now do it (**Administration > IP configuration > DNS configuration**).*

VoIP provider

In the PBX you can create up to 20 VoIP providers. Configure the VoIP providers with which you have accounts. Often used VoIP providers and their configuration are already configured in the PBX.

Requirements

– Configuration manager, opened with sufficient authorization

Steps to take

1. Open the page **Public switched tel. networks > Voice over IP (VoIP) > Provider**.

   The VoIP providers already configured are listed. If your provider is not in the list, create it as follows.

2. Click **New**.
3. In the **Provider name** entry field, enter a name with a maximum of 16 characters.
4. Click **Saving**.
5. Click **Configure** in the corresponding line.
6. Configure the settings for the provider. You will receive the data directly from the provider or over the corresponding lists on the Internet.
7. Click **Saving**.
8. Click **Back**.
9. Repeat step 2 to 8 for all additional providers.

   Note: *Click **Online configurations** to download provider configurations supported by Auerswald from the Internet.*

VoIP accounts

In the PBX you can configure up to 100 VoIP accounts.

Requirements

– Configuration manager, opened with sufficient authorization

– Configured VoIP provider

Steps to take

1. Open the page **Public switched tel. networks > Voice over IP (VoIP) > Accounts**.
2. Click **New**.
3. In the **Provider name** list field, select the corresponding provider.
4. In the **Account name** entry field, enter a name with a maximum of 16 characters.
5. Under **Kind of connection**, select the kind of VoIP account depending on the available telephone numbers:

PTP connection: For VoIP accounts with a DDI number block based on the SIP-DDI feature (also known as SIP trunking).

PTMP connection: For VoIP accounts with one or more VoIP telephone numbers.

6. Click **Saving**.
7. Repeat step 2 to 6 for all additional accounts.

Further steps

▷ Click **Configure**, to configure the VoIP account. See VoIP Point-to-Multipoint Connection on page 64 and VoIP Point-to-Point Connection on page 64.

VoIP Point-to-Multipoint Connection

Requirements

– Configuration manager, opened with sufficient authorization

– Created VoIP account with kind of connection PTMP connection (see VoIP accounts on page 63)

Steps to take

1. In the **Exchange line access number (account number)** entry field, enter an internal telephone number from the telephone numbering plan (see Internal Telephone Numbers on page 59).
2. In the **User name**, **Password** and, if necessary, **Authorization ID** entry fields, enter the access data provided for login.
3. Click **New**.
4. In the **Multiple subscriber number (MSN)** entry field, enter your first available MSN.
5. In the **Display name** entry field, enter a name with a maximum of 16 characters.
6. In the **Ringer rhythm** list field, select the desired ringer rhythm for external calls via this telephone number.
7. Click **Saving**.
8. Repeat step 3 to 7 for all additional MSNs.
9. Click **Back**.

   Note: *When using the provider T-Online, the Internet phone numbers received from the provider must be entered under* ***User name****,* ***Multiple subscriber number (MSNs)*** *and* ***Display name****.*

VoIP Point-to-Point Connection

Requirements

– Configuration manager, opened with sufficient authorization

– Created VoIP account with kind of connection PTP connection (see VoIP accounts on page 63)

Steps to take

1. In the **Exchange line access number (account number)** entry field, enter an internal telephone number from the telephone numbering plan (see Internal Telephone Numbers on page 59).
2. In the **User name**, **Password** and, if necessary, **Authorization ID** entry fields, enter the access data provided for login.
3. In the **PBX base number** entry field, enter the PBX base number (without extension).
4. In the **from:** entry field under **DDI number block (DDIs)**, enter the extension range with the lowest DDI.

   Note: *Make sure to follow the instructions provided by your provider for entering the DDI number block exactly. If you want to enter a one or two-digit DDI range, your provider must provide you with one and two-digit DDIs. The same applies to a two and three-digit DDI range.*

5. In the **until:** entry field under **DDI number block (DDIs)**, enter the extension range with the highest DDI.

   Note: *For linear call distribution (****Public switched tel. networks > Call distribution > Linear call distribution****) you only have to enter differing DDIs for the connection. I. e., for similar internal telephone numbers and external extension numbers, in linear call distribution a 1:1-assignment is made automatically for the DDIs from the DDI number block (DDIs).*

   For linear call distribution you can configure the ringer rhythm under ***Ringer rhythm for above mentioned PTP connection****.*

6. Click **Saving**.
7. Click **Back**.

Call Distribution

Call distribution is required to establish a connection between the external telephone numbers already configured and the internal subscribers.

When using a Point-to-Multipoint connection (ISDN and VoIP), the internal telephone numbers are individually assigned to the MSNs.

On a Point-to-Point connection (ISDN and VoIP), the configuration of a linear call distribution is usual (e. g., a call to 4711-21 is distributed to the internal subscriber telephone number 21). This includes having assigned internal telephone numbers that lie in the extension number range (DDIs) assigned by the network provider. Call distribution can then occur automatically.

Organisational, system-dependent or company internal guidelines can require diverging from linear telephone number assignments in particular situations. To do this, the PBX gives you the option of configuring divergent call distribution. This configuration is done in two steps. In the first step, the PBX is notified which telephone numbers are to be taken out of the linear call distribution. In the second step, the telephone numbers are directly assigned internal subscribers.

If multiple internal devices should be accessible over an external telephone number, an internal group, to which the subscribers in question are assigned, is selected as the destination for the call distribution.

Configuring call distribution

In the PBX, configure the call distribution for each entered external telephone number.

In the PBX, configure the linear call distribution for the entered DDI number range as well as the differing call distribution.

Requirements

- Configuration manager, opened with sufficient authorization
- Configured subscribers/groups (see Internal subscribers on page 59 or Internal groups on page 60)
- Configured external connections (see External Telephone Numbers on page 61)

Steps to take

1. Open the page **Public switched tel. networks > Call distribution**.
2. In the first list field **Call distribution for**, select one of the following options:

   ISDN point-to-point connections

   ISDN point-to-multipoint connections

   VoIP point-to-point connections

   VoIP point-to-multipoint connections

3. In the second list field **Call distribution for**, select one of the following options:

   VoIP or ISDN point-to-point connection:
   PBX base number [DDI number block]|Name

   Under **DDI** the entered DDIs are listed.

   ISDN point-to-multipoint connection: Slot ... - Port ...|Name

   Under **MSN** the entered MSNs are listed.

   VoIP point-to-multipoint connection: Account name

   Under **MSN** the entered MSNs are listed.

4. Point-to-point connection: Select or clear the **Linear call distribution (external = internal)** check box.
5. Point-to-point connection with linear call distribution:

   If necessary, click **New**.
   In the **DDI** entry field, enter a DDI differing from the linear call distribution.
   Click **Saving**.

   Note: *DDIs that differ from the linear call distribution must be in the entered DDI number block.*

6. In the **Internal tel. no. | Name** list fields, select an internal telephone number for each external telephone number (MSN or DDI).
7. Click **Saving**.
8. Repeat step 2 to 7 for all additional external connections.

End of Basic Configuration

The basic configuration Example 1 on page 56 is now completed.

In order to get an overview of the telephone numbers set and their distribution in the PBX, there are several helpful overviews.

> ***Note:*** *For more information on how to best check the function of the configured settings, refer to* *Testing Basic Configuration on page 66*.

Overviews

Check the internal subscribers, groups and assignments of external to internal telephone numbers (call distribution) configured in your PBX.

Requirements

– Configuration manager, opened with sufficient authorization

Steps to take

- Open one of the following pages:

  Subscribers: **Overviews > Telephone numbering plan**

  Groups: **Overviews > Groups**

  Call distribution: **Overviews > Call distribution**

  Note: *You can use the printing function in your browser to print out this overview.*
  It is advisable to print the page in landscape format.

Testing Basic Configuration

After basic configuration is completed, the PBX can be put into operation and the connected devices can be tested for function. The tests described in the following apply to all the telephone numbers and devices connected to your PBX.

> ***Important:*** *The prerequisite is that your PBX, as described in the Installation and Commissioning Instructions, has been installed and all the devices properly connected under the supervision of qualified electrician and in compliance with the safety instructions*
>
> ***Note:*** *The tests described are only a few of the options you have for performing general testing on your PBX.*
>
> *Note that for standard VoIP telephones, a dial tone is generated by the telephone itself and therefore can not indicate whether calling is possible.*

Checking telephone connections and internal telephone numbers

Steps to take

1. Pick up the receiver on an internal telephone.

   You hear the internal dial tone. This signal tells you that you can now start dialling a number.

2. Dial the internal telephone number for a neighboring telephone.

3. The telephone called rings.

4. Hang up the receiver.

   Note: *If you do not hear an internal dial tone on individual telephones, ...*

   → *... check the line between the telephone and the wall socket or the telephone itself.*

   → *... check whether internal telephone numbers have been defined for the telephones in question (see* *Overviews on page 66**).*

   → *... check whether the internal telephone number defined for the telephone has been entered as the first MSN in the telephone (only ISDN and system telephones). Note that for ISDN telephones, this MSN must also be transmitted from the telephone to the -PBX (see the manual for the telephone).*

   → *... disconnect the telephone in question for approx. 5 seconds from the PBX and, if necessary, the 230-V-power supply (pull the power plug).*

   If you do not hear an internal dial tone on any of the telephones (exception: handsets on a COMfortel DECT IP1040 Base generally do not have an internal dial tone), ...

   → *... check whether the PBX power plug is properly inserted into the power socket.*

   → *... restart the PBX with the button* ***Reset****.*

   If the telephone called does not ring, ...

→ *... check whether the internal telephone number called has been assigned to the telephone in question (see Overviews on page 66).*

→ *... check whether the telephone bell is switched off (see the manual for the telephone).*

→ *... check the registration status and, if necessary, the access data on VoIP telephones.*

If the connection is immediately disconnected after picking up the VoIP telephone being called or no calling is possible, ...

→ *... check the codec configured in the telephone and change it, if possible. The PBX supports the following codecs: G.711 and iLBC.*

If no incoming call on a VoIP telephone is possible, although it has been registered, ...

→ *... check the codec configured in the telephone and change it, if possible. The PBX supports the following codecs: G.711 and iLBC.*

Checking external connections

Steps to take

1. Pick up the receiver on an internal telephone.

You hear the internal dial tone. This signal tells you that you can now start dialling a number.

2. Dial the exchange line access number.

You hear the external dial tone. This signal tells you that an external line is available for dialling an external telephone number.

3. Dial the external telephone number for a neighboring internal telephone.

4. The telephone called rings.

5. Hang up the receiver.

6. If the telephone should be accessible over additional external telephone numbers, repeat step 1 to 5 for all additional external telephone numbers.

Note: *If the telephone called does not ring, ...*

→ *... check whether the external telephone number called has been assigned to the telephone in question (see Overviews on page 66).*

If you do not hear an external dial tone, ...

→ *... check the function of the NT by connecting a single ISDN telephone to the NT (for an NT with connection type -Point-to-Point connection, the ISDN telephone must be compatible for operating on the -Point-to-Point connection). If it is still not possible to make a call, disconnect the NT for approx. 5 seconds from the 230-V- power supply (pull the power plug)* ***and*** *the exchange line connection (pull the TAE connector). If you can now make outbound calls again, this means that the NT was disrupted. If the malfunction remains, notify your line fault service.*

If none of the telephones that are accessible over an external connection (NT) ring, ...

→ *... disconnect the NT for approx. 5 seconds from the 230-V- power supply (pull the power plug) and the exchange line connection (pull the TAE connector). If you can now make outbound calls again, this means that the NT was disrupted. If the malfunction remains, notify your line fault service.*

Example 2: Time-dependent Configurations (PBX Profiles)

In the following example (see figure), the PBX from Example 1 on page 56 is extended by time-dependent configurations (business hours, night, weekend, holidays).

Note: *Note that this section thoroughly describes only the most important settings.*

Configuration 1
Name: Business hours
Identification number: 201
Call distribution: as in Example 1 on page 56

Configuration 2
Name: Night-weekend
Identification number: 202
Call distribution: as configuration 1 except 4711-0 and 4712 to 20 (analogue answering machine)

Configuration 3
Name: Holiday
Identification number: 203
Call distribution: as configuration 1 except 4711-0 and 4712 to 20 (analogue answering machine)

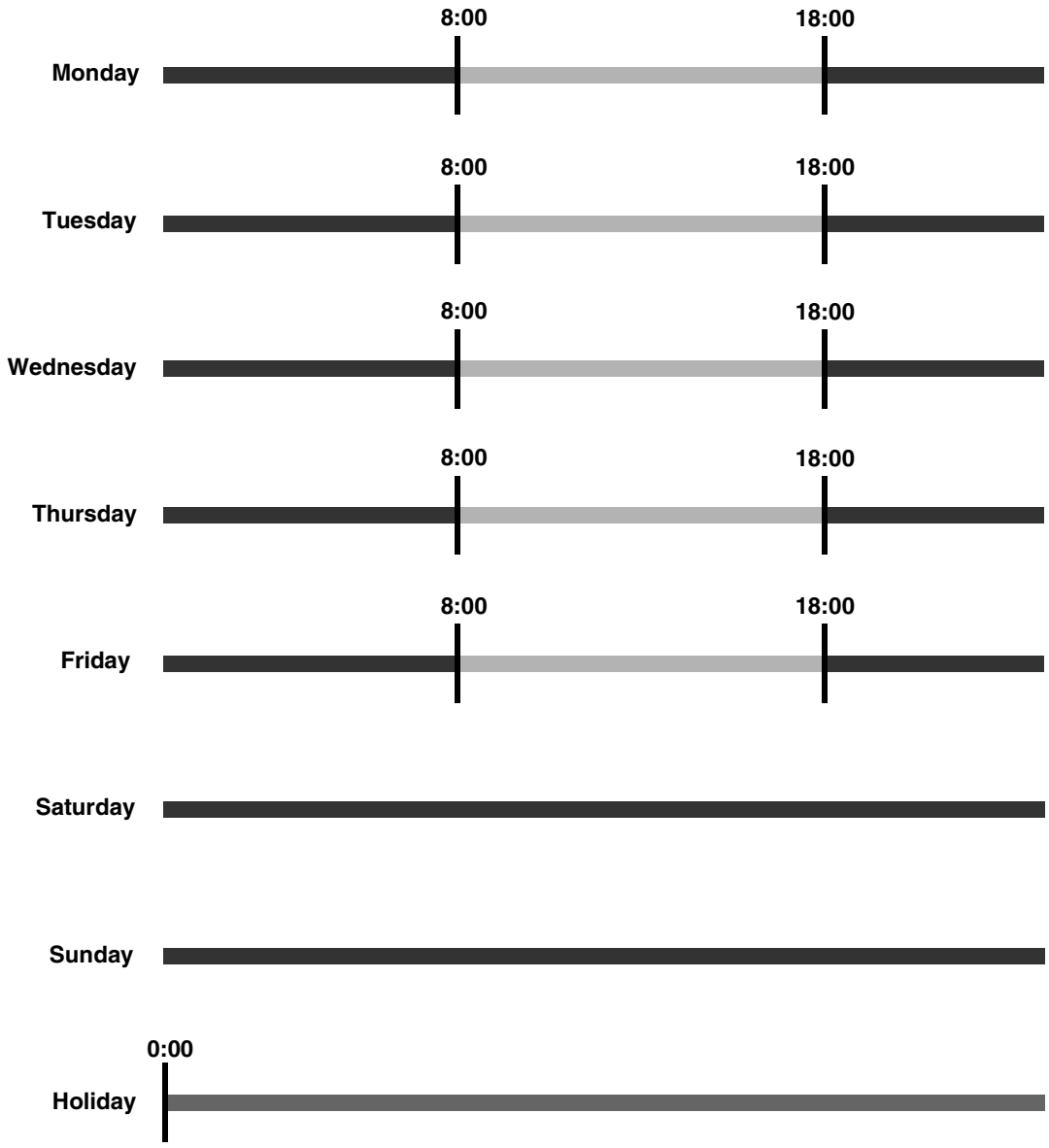

Time-dependent Switching (Time Control)

The PBX gives you the option of customizing various function configurations, for example, day, night, weekend, vacation and holidays settings. There are ten configurations available.

The switch from one configuration to another can be made according to a schedule based on PBX system time or manually from internal or external subscribers (telephones with the corresponding authorization).

> ***Note:*** *The PBX requires 2 to 4-digit ID numbers for uniquely assigning the configurations (after inserting a COMmander 2TSM (R) module also for the configured relays and alarms). These numbers can be freely assigned in the 10-9999 range.*
> *Double assigning a number is not possible!*
> *On the page* ***Overviews > Identification numbering plan*** *you can get an overview of the ID numbers already assigned at any time.*

Creating configurations (PBX profiles)

Create the needed configurations (PBX profiles).

Requirements

– Configuration manager, opened with sufficient authorization

Steps to take

1. Open the page **Time control > Configurations.**
2. Click **New**.
3. In the **Configuration name** entry field, enter a suitable name with a maximum of 16 characters.
4. Click **Saving**.

   The configuration was created with a automatically assigned identification number.
5. Repeat step 2 to 4 for all additional configurations.
6. If necessary, change the name **config-1** under **Configuration name** (up to 16 characters).
7. In order to change the automatically assigned identification numbers, double-click in the corresponding line under **Identification number** and enter a 2 to 4-digit identification number.

Further steps

▷ Save your settings before you leave the page.

▷ Configure the configuration-dependent settings for the created configurations (see Configuring Configuration-dependent settings on page 70).

▷ If necessary, copy a configured configuration to transmit the configuration-dependent settings for new configurations (**Copy**).

Configuring switching times

Configure the switching times for the configurations (PBX profiles).

Requirements

– Configuration manager, opened with sufficient authorization

– At least two configured configurations

– For using holidays: configured holidays (**Functions > Calendar**)

Steps to take

1. Open the page **Time control > Switching times > Monday.**
2. Click **New**.
3. In the **Time** list fields, select a time.
4. In the **Configuration** list field, select the configuration to be switched on at the selected **Time**.
5. Click **Saving**.

   The switching times are shown in the list.
6. Repeat step 2 to 5 for all additional switching times on this weekday.
7. Configure the settings for the other weekdays and the holidays (**Holiday** tab).

Further steps

▷ Save your settings before you leave the page.

> ***Note:*** *If the same switching times are required for more than one weekday, it is sufficient to set them up for only one day. The switching times can be copied to other weekdays (Copying switching times on page 70).*
>
> *he configuration that was last valid on the previous day is always transmitted to the next day. Therefore, it is not necessary to activate a configuration at midnight if the configuration had already been activated on the previous day or also on other days in the past.*
>
> ***Important:*** *An activated holiday is taken into account from 12 p.m. of the one day until 12 p.m. on the following day.*
> *On an activated holiday, the switching times for the corresponding weekday are taken into account if no holiday switching times have been entered (holiday).*
> *If the normal sequence is interrupted by special switching times/configurations on a holiday, the configuration of the day before is valid at the beginning of the holiday as long as it is switched over (automatically or manually). If, for example, another holiday follows a holiday, the last valid configuration of the holiday before remains switched on as long as the configuration is switched over the second holiday.*

If the holiday end at 12 p.m. the usual configuration for the weekday is switched on (even if a configuration was manually switched on during the holiday).
*Configuring the holidays is done in the calendar of the PBX on the page **Functions > Calendar**.*
In addition to or instead of public holidays, you can also use the calendar to enter company holidays.

Copying switching times

Copy the switching times for the first weekday set to the weekdays with the same switching times.

Requirements

– Configuration manager, opened with sufficient authorization

– Switching times configured for a weekday

Steps to take

1. Open the page **Time control > Switching times.**
2. Click **Copy**.
3. In the **Source** list field, select the completely configured weekday.
4. Under **Add/Replace**, select one of the following options:

   Add: The source switching times are added to the destination switching times.

   Replace: Existing times in the destinations are replaced by the source times.
5. Under **Target**, select the check boxes of the weekdays for which the switching times are to be added/replaced.

Further steps

▷ Save your settings before you leave the page.

Switching automatic configuration switchover on/off

Requirements

– Configuration manager, opened with sufficient authorization

– At least two configured configurations

– Configured switching times

– Current PBX time

Steps to take

1. Open the page **Time control > Configurations.**
2. Select or clear the **Automatic configuration switchover** check box.

Checking switching times

Check how long the configurations (PBX profiles) are valid.

Requirements

– Configuration manager, opened with sufficient authorization

– Enabled automatic configuration switchover

Steps to take

- Open the page **Overviews > Switching times.**

  The overview shows how long the configurations (PBX profiles) are valid (colours see legend). It also shows a performed manual switchover, if present.

  If a holiday has been configured for the current week, the weekday in question is highlighted in colour and the changes resulting from the holiday switching times configured are displayed.

Configuring Configuration-dependent settings

The following settings are configuration-dependent:

- Profile assignment of the subscribers (and for example, therefore exchange line authorization, telephone number display and call forwarding for subscribers)
- Profile assignment of the groups (and for example, therefore text before ringing, exchange line authorization, telephone number display and call forwarding for groups
- Fallback options for the external ports (fallback telephone number and fallback according to time)
- Call distribution to internal destination numbers (subscribers, groups, voice mail/fax boxes (only with COMmander VMF (R) module), automatic receptions)
- Door call distribution (only with COMmander 2TSM (R) module)
- Relays with operation mode **Configuration-depending**
- VoIP/GSM routing
- Call forwarding for own external numbers
- Readiness of the voice mail/fax boxes; reject anonymous fax calls; call acceptance of the voice mailboxes, e. g. replacement function (only with COMmander VMF (R) module)

Profile assignment of subscribers

Configure the profile assignment for the subscribers as configuration-dependent.

Requirements

- Configuration manager, opened with sufficient authorization
- Created internal subscribers
- Configured subscriber profiles
- Created and time-dependent configurations

Steps to take

1. Open the page **Subscriber (scr.) > Profiles > Profile assignment > [configuration name].**
2. In the list fields, select the desired profiles configuration-dependent.

   Note: *If you need one single profile for all subscribers during a configuration, select the* ***Assign profile to all*** *check box and select the desired profile in the list field.*

Further steps

▷ Save your settings before you leave the page.

Profile assignment of groups

Configure the profile assignment for the groups as configuration-dependent.

Requirements

- Configuration manager, opened with sufficient authorization
- Created groups
- Configured group profiles
- Created and time-dependent configurations

Steps to take

1. Open the page **Groups > Profiles > Profile assignment > [configuration name].**
2. In the list fields, select the desired profiles configuration-dependent.

   Note: *If you need one single profile for all groups during a configuration, select the* ***Assign profile to all*** *check box and select the desired profile in the list field.*

Further steps

▷ Save your settings before you leave the page.

Call distribution

Configure the call distribution as configuration-dependent.

Requirements

- Configuration manager, opened with sufficient authorization
- Configured PTMP and/or PTP connection
- Created and time-dependent configurations

Steps to take

1. Open the page **Public switched tel. networks > Call distribution**.
2. Click the tab of the configuration to be changed.
3. In the first **Call distribution for** list field, select one of the following options:

   ISDN point-to-point connections

   ISDN point-to-multipoint connections

   VoIP point-to-point connections

   VoIP point-to-multipoint connections
4. In the second **Call distribution for** list field, select one of the following options:

   VoIP or ISDN point-to-point connection:
   PBX base number [DDI number block]lName

   Under **DDI** the entered DDIs are listed.

   ISDN point-to-multipoint connection: Slot ... - Port ...lName

   Under **MSN** the entered MSNs are listed.

   VoIP point-to-multipoint connection: Account name

   Under **MSN** the entered MSNs are listed.
5. In the **Internal tel. no. l Name** list fields, select an internal telephone number for each external telephone number (MSN or DDI).
6. Click **Saving**.
7. Repeat step 3 to 6 for all additional external connections.
8. Repeat step 2 to 7 for each additional configuration to be changed.

Index

884316 05 12/12

For the sake of the environment – 100% recycled paper